GET PRECISE RESULTS FROM YOUR ROUTER

Woodsmith®

www.woodsmith.com

Vol. 31 / No. 182

Woodsmith 30 YEARS 1979 - 2009

A New Angle On Box Joints

Learn This New Table Saw Technique in a Weekend

See Page 16

INSIDE:

One Saw No Woodworker Should Be Without

A Must-Have Jig for Every Shop

Dust Collection System that Won't Break the Bank

A Publication of August Home Publishing

Table of Contents

from our readers
Tips & Techniques 4

all about
Choosing Veneer 8
Veneer offers options you don't have with solid wood. Here's how to make the right choice.

tools of the trade
Dust Collectors 10
Find out what you need to know to select and set up a dust collector for your shop.

jigs and fixtures
Rockler's Concealed Hinge JIG-IT. .14
This handy jig makes using European-style hinges even easier. Take a look.

tips from our shop
Shop Notebook 30

woodworking technique
Router Templates. 42
When it comes to shaping perfect duplicate parts, a router and a template can't be beat.

working with tools
Coping & Fret Saws 44
Every shop needs one of these essential saws. Here's how to choose one and put it to use.

finishing room
Applying Shellac 46
We'll show you three easy ways to successfully apply this versatile finish to your projects.

details of craftsmanship
Solid-Wood Drawer Bottoms. 48
A traditional project deserves all the right details — including solid-wood drawer bottoms.

in the mailbox
Q & A 50

hardware and supplies
Sources 51

Silverware Tray page 16

Storage Bench page 22

projects

weekend project

Box-Jointed Silverware Tray 16

The design is classic, but the woodworking is definitely up-to-date. You'll learn how to cut angled box joints on the table saw and get a tray with countless uses out of the deal.

designer series project

Woodsmith GO ONLINE EXTRAS

Storage Bench 22

You usually don't think of a bench as a storage project — but this one sure qualifies. It features plenty of seating on top as well as a place for three, roomy storage baskets below.

heirloom project

Craftsman-Style Wall Cabinet. 32

The Craftsman heritage of this handsome wall cabinet is unmistakable. And you'll appreciate the fact that the woodworking is uncomplicated and, of course, solid as a rock.

home office project

Three-Tiered In-Box 38

It's surprising that something so practical could look this good. With its splined miter joints, contrasting woods, and sliding trays, this stylish in-box is sure to be a hit.

editor's note
Sawdust

Woodsmith 30 YEARS 1979 - 2009

One of the things I enjoy about woodworking is that no matter how long you've been at it, there always seems to be something new to learn. The silverware tray in this issue is a perfect example. At first glance, it looks like a simple enough project — a handled tray with angled sides. But take a closer look and you'll notice that the corners of the tray are joined with box joints.

Now, we've made a number of projects with box joints in the past, but figuring out how to make *angled* box joints — that was something new. Because the sides of the tray splay outwards, it took quite a bit of head-scratching to come up with a method for cutting the box joints. After a lot of experimenting, we finally came up with a technique that works great and isn't difficult to master. And when you take a look at the end result, I think you'll agree that it was definitely worth all the effort.

But as nice as the completed tray looks, I have to say that the real satisfaction for me came from the challenge of figuring out how to do something that I'd never tried before. It's this kind of new woodworking experience that keeps me looking forward to the time I spend in the shop.

Terry

In-Box page 38

Wall Cabinet page 32

Tips & Techniques

Router Guide and Clamp

Whenever I needed to cut a groove or a dado in the middle of a large workpiece, I would usually turn to my router along with a pattern bit and a straight-edge clamp. But since the clamp isn't flat on top, I had to run the router with the base on the workpiece.

This required figuring out the distance to set the clamp from the layout line, taking into account the diameter of the router plate and the thickness of the router bit. And it also meant a lot of extra measuring to position the clamp for each cut.

So I modified a simple self-clamping straight-edge that let's me do away with all that figuring. I can just clamp the guide to the workpiece and place the router on top of the guide. A pattern bit with the bearing against the edge of the guide is the key.

Here's how it works. I cut a piece of MDF about three times the width of the straight-edge clamp. Then I cut a groove in the MDF wide enough to hold the clamp (drawing below). Some double-sided tape holds it in place (inset photo).

Now all I have to do is position the clamp on the line. The MDF creates a flat surface for my router base to ride on while I rout the dado or groove (main photo).

Roger Tumbleson
Lake Havasu City, Arizona

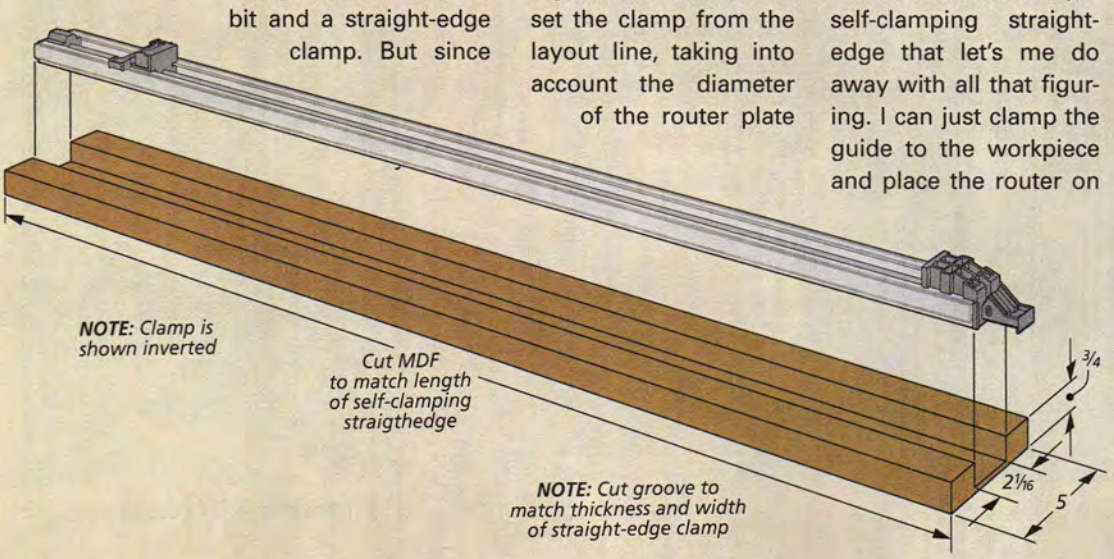

Nylon Rollers Tend Hoses

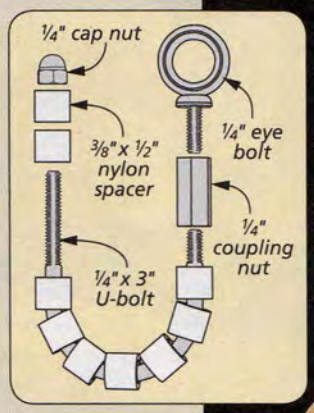

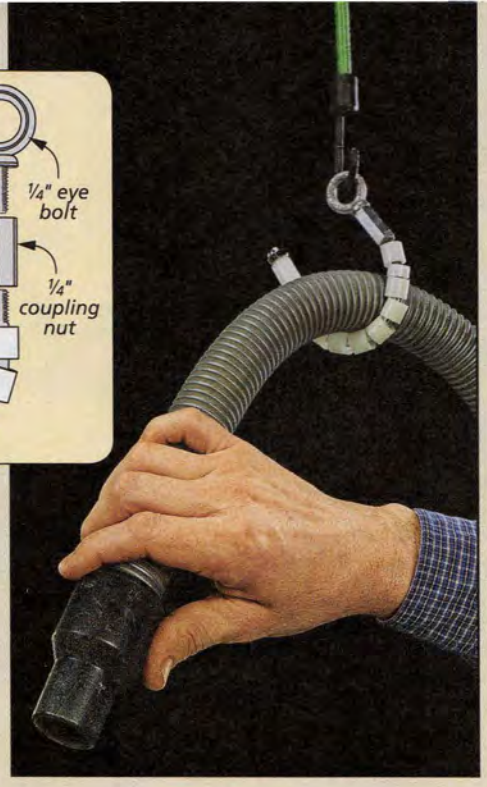

To keep the hose from my shop vacuum out of the way, I have it suspended from hooks over my bench. But sometimes the ribbed hose catches on the hook — a frustrating situation. So I added a few, inexpensive nylon spacers to keep the hose from snagging on the hook.

As you can see in the drawing, the nuts keep the rollers on the rod and the eye bolt lets me hang it from a convenient hook overhead.

Sean Ewing
Minneapolis, Minnesota

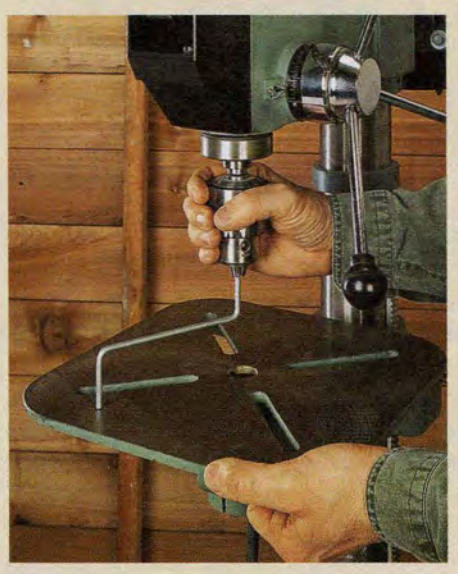

Squaring Your Drill Press

I recently found the drill press table in my shop was not perpendicular to the drill bit. The improvised machinist's "wiggler" gauge you see in the photo at left makes resetting the table easy.

The gauge is nothing more than a piece of 3/16"-dia. steel rod with a couple of 90° bends. To use the gauge, I chuck the rod in the drill and then turn it by hand. The tip of the rod should touch the table at each point as it turns in the drill press. Just keep making adjustments and checking the table with the gauge until it's set correctly.

Matt Feehan
Little Rock, Arkansas

SUBMIT YOUR TIPS ONLINE

If you have an original shop tip, we would like to hear from you and consider publishing your tip in one or more of our publications. Go to:

Woodsmith.com
Click on the link,
"SUBMIT A TIP"

You'll be able to tell us all about your tip and upload your photos and drawings. You can also mail your tips to *"Woodsmith Tips"* at the editorial address shown at right. We will pay up to $200 if we publish your tip.

FREE TIPS BY EMAIL

Now you can have the best, time-saving secrets, solutions, and techniques sent directly to your email inbox. Just go to **Woodsmith.com** and click on *"Sign Up for Free E-Tips."* You'll receive one of our favorite tips each week.

Woodsmith

No. 182 April/May 2009

PUBLISHER Donald B. Peschke

EDITOR Terry J. Strohman
MANAGING EDITOR Vincent Ancona
SENIOR EDITOR Ted Raife
ASSOCIATE EDITOR Dennis Perkins
ASSISTANT EDITOR Carol Beronich
CONTRIBUTING EDITORS Bryan Nelson, Phil Huber, Randall A. Maxey
EDITORIAL INTERN Catherine Seiser

EXECUTIVE ART DIRECTOR Todd Lambirth
SENIOR ILLUSTRATORS David Kreyling, Dirk Ver Steeg, Harlan V. Clark, Peter J. Larson, David Kallemyn
SENIOR GRAPHIC DESIGNER Bob Zimmerman
GRAPHIC DESIGNER Shelley Cronin

CREATIVE DIRECTOR Ted Kralicek
SENIOR PROJECT DESIGNERS Ken Munkel, Kent Welsh, Chris Fitch, Jim Downing, Mike Donovan
PROJECT DESIGNER/BUILDER John Doyle
SHOP CRAFTSMEN Steve Curtis, Steve Johnson
SENIOR PHOTOGRAPHERS Crayola England, Dennis Kennedy
ASSOCIATE STYLE DIRECTOR Rebecca Cunningham
SENIOR ELECTRONIC IMAGE SPECIALIST Allan Ruhnke
PRODUCTION ASSISTANT Minniette Johnson
VIDEO EDITOR/DIRECTOR Mark Hayes, Nate Gruca

Woodsmith® (ISSN 0164-4114) is published bimonthly (Feb., Apr., June, Aug., Oct., Dec.) by August Home Publishing Company, 2200 Grand Ave, Des Moines, IA 50312.
Woodsmith® is a registered trademark of August Home Publishing.

Copyright© 2008 August Home Publishing Company. All rights reserved.

Subscriptions: Single copy: $4.95. One year subscription (6 issues), $24.95. (Canada/International add $10 per year, U.S. funds.)
Canadian Subscriptions: Canada Post Agreement No. 40038201. Send change of address information to PO Box 881, Station Main, Markham, ON L3P 8M6.
Canada BN 84597 5473 RT
Periodicals Postage Paid at Des Moines, IA, and at additional offices.
Postmaster: Send change of address to *Woodsmith*, Box 37112, Boone, IA 50037-2112.

WoodsmithCustomerService.com

ONLINE SUBSCRIBER SERVICES

- **VIEW** your account information
- **RENEW** your subscription
- **CHECK** on a subscription payment
- **PAY** your bill
- **CHANGE** your mailing or email address
- **VIEW/RENEW** your gift subscriptions
- **TELL US** if you've missed an issue

CUSTOMER SERVICE Phone: 800-333-5075

SUBSCRIPTIONS
Customer Service
P.O. Box 842
Des Moines, IA 50304-9961
subscriptions@augusthome.com

EDITORIAL
Woodsmith Magazine
2200 Grand Avenue
Des Moines, IA 50312
woodsmith@woodsmith.com

AUGUST HOME PUBLISHING COMPANY

Printed in U.S.A.

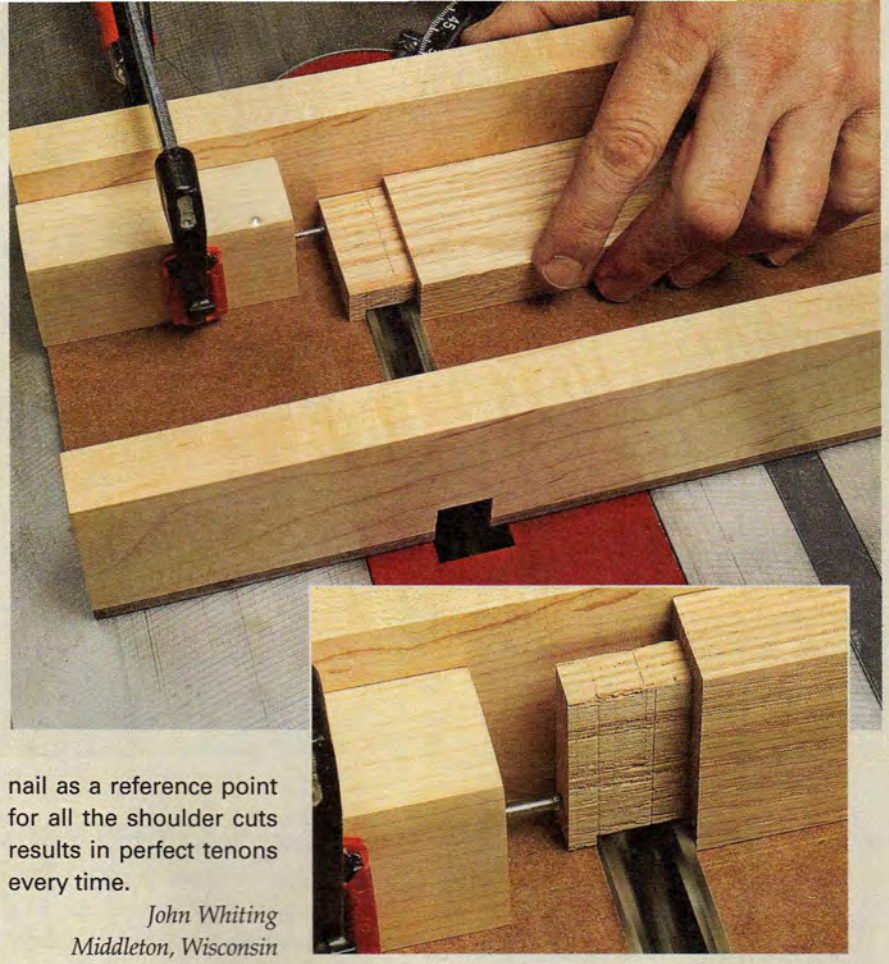

Tenon-Cutting Sled

I was having a problem cutting tenons on my table saw because the rip fence I was using as a stop wasn't square with the table. The result was stepped shoulders. So I came up with a tenon-cutting sled that attaches to my table saw miter gauge (photo at right).

The sled is just a hardboard platform with a couple of wood fences. It uses a single point stop to gauge the length of the tenon. I drove a finish nail into a stop block and clamped it to the sled. Using the finish nail as a reference point for all the shoulder cuts results in perfect tenons every time.

John Whiting
Middleton, Wisconsin

Table Saw Biscuit Fence

I use my biscuit joiner a lot. It makes fast and accurate joinery and it's a real time-saver.

But using this tool means clamping and unclamping the workpiece each time I need to cut a slot. I wanted a faster way to get the job done. So I decided to use my table saw as a work table. I came up with this simple fence that fits in the miter gauge slot, as shown in the left photo.

It's just a 1"-thick board with a rabbet cut in one edge so that it fits in the miter gauge slot of my saw. This way, the workpiece I'm working on is secure without clamps getting in the way.

Serge Duclos
Delson, Québec

Allen Wrench Guide

Adding levelers to a free-standing cabinet sure makes it easier to adjust. But guiding the Allen wrench into the leveler to make an adjustment is a lesson in patience. I solved this problem with a piece of plastic tubing.

Before I finish the cabinet, I drill a hole in the base directly above the leveler. Then I press a piece of tubing through the hole and over the top of the threaded rod (drawing at right). This way, the Allen wrench slides right into position without going off track on it's way to the leveler. I can adjust the height of the leg much easier with tubing as a guide.

Joseph Sharle
Holly Springs, N. Carolina

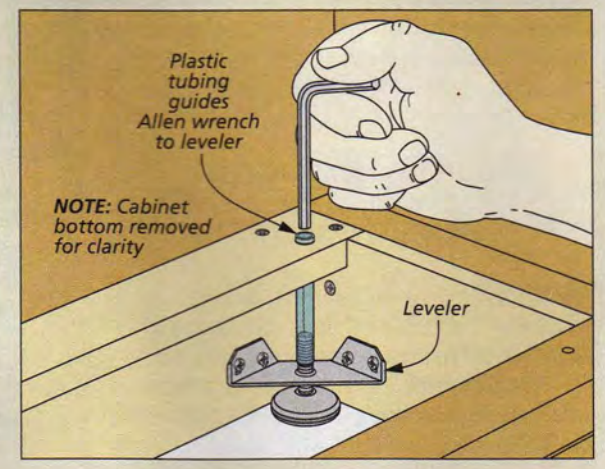

Sander Stand

Sanding small parts can be a challenge. That's why I built the palm sander stand you see in the photo at right. The stand holds my sander securely upside down so I can concentrate on sanding the part.

I made the base large enough so it can be clamped to my workbench. The sides and top are sized to fit my sander. A bolt and star knob squeeze the sander to hold it steady while it's operating.

Now I have a safe and stable place to fine-tune small parts.

Roger Bares
Rapid City, South Dakota

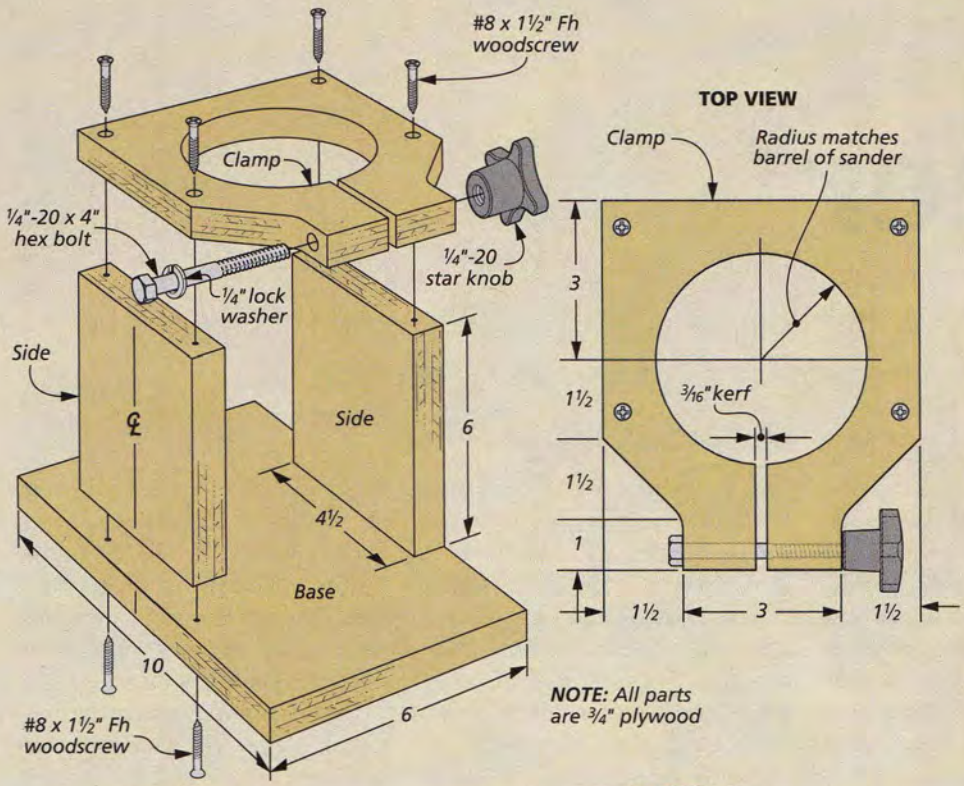

NOTE: All parts are ¾" plywood

Win This Bosch *Impactor*

That's right, send us your favorite shop tips. If your tip or technique is selected as the featured reader's tip, you'll win a *Bosch* impact driver just like the one shown here. To submit your tip or technique, just go online to *www.woodsmith.com* and click on the link, "SUBMIT A TIP." You can submit your tip and upload your photos for consideration.

The Winner!

Congratulations to Roger Tumbleson, winner of the *Bosch Impactor* driver. To find out how you could win a *Bosch* driver, check out the information on the left.

Quick Tips

MULTI-PURPOSE MASKING TAPE

I always keep a roll of masking tape in the pocket of my work apron. It comes in handy for a number of uses around the shop.

You can use it to label workpieces to match wood grain and note order and directions for assembly. I also mark cut lines on the tape instead of directly on the part. You can saw through the tape and you avoid having to erase pencil marks. Plus, it shows well on dark wood.

I lay out drilling locations on tape and drill through the tape, as well. And it makes a good depth-stop indicator wrapped around a drill bit to drill to a precise depth.

Richard Natoli
Girard, Ohio

DISPOSABLE SHOP APRON

I do a lot of spray finishing in my shop, and I was having a problem with finish settling on my clothes. Instead of buying disposable aprons, I came up with a less-expensive alternative. I use a 30-gallon plastic trash bag.

By cutting a 10" slit at the top seam for my head and 8" slits on each side for my arms, I have an inexpensive, throw-away apron.

Bill Rynone
Annapolis, Maryland

TIMERS IN THE SHOP

In any woodworking shop there are jobs that need to be timed. That's why I keep an ordinary kitchen timer in my shop to set for all sorts of tasks.

It's easy to put three minutes on the timer while I stir epoxy. I can also set it for a little longer so I have a good idea for when the wood glue skins over and I can scrape off the squeeze-out from the joint. It's also a good reminder to return to a finishing job for the next coat. Now I have a handy way to track tasks in the shop.

Charles Mak
Calgary, Alberta

choosing Veneer

With the right veneer, beautiful figure patterns and striking, exotic woods can be a part of your woodworking projects.

There are a lot of reasons to use veneer in a project. The main one being that you can purchase exotic or highly figured veneers for a fraction of the cost of solid boards. Veneer sheets can also be cut and matched to form stunning patterns and intricate designs. Whatever project you're building, there's probably a way to incorporate some veneer into the plan.

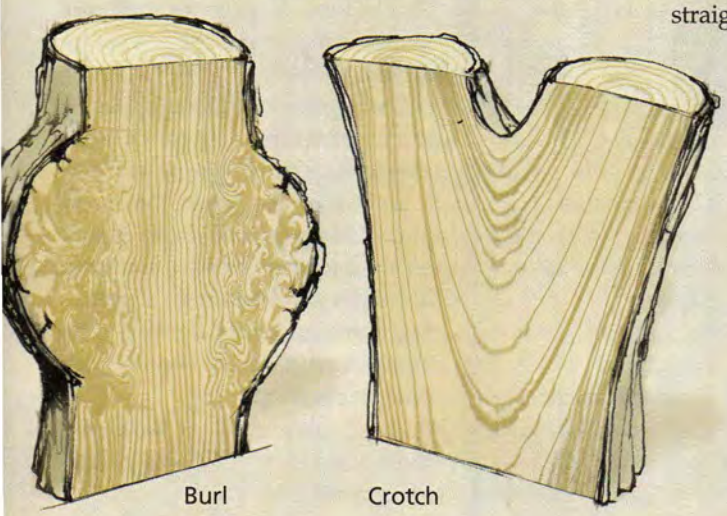

▼ A burl (left) and a crotch section (right), create unique swirling grain patterns for veneer.

TYPES OF VENEER

The challenge comes in choosing the right veneer for the job. Veneer can be divided into two types — raw veneer and backed veneer.

Both types of veneer are available in a variety of wood species and grain patterns. So you'll need to take that into consideration too before you make a choice.

Raw wood veneer can be either straight grained or figured, which I'll talk about later. It's often used to create matching patterns and works well when applied to both curved or flat surfaces in sheets. Backed veneer is generally used for covering wide, relatively flat surfaces like tabletops, chests, or other large furniture pieces.

RAW WOOD. Raw wood veneer is sliced or cut directly from the log at the mill, typically varying in thickness from 1/32" and 1/42". It's dried and sold in single sheets or in bundles of consecutive sheets, known as a flitch. The flitch, like the one you see in the main photo, will have naturally matching pieces that can be used to create interesting patterns.

The width and length of the individual pieces will depend on the species of the tree and how the log is cut (flatsawn or quartersawn, for example). Long sheets of veneer are often rolled up for shipping, as in the photo above. To cover wide surfaces, you usually have to join several sheets together.

FIGURED VENEER. One of the main reasons to use veneer is the wide range of figured veneers that are available. Two of the most common forms of figured veneers are burl and crotch (drawing at left).

A burl is abnormal growth, usually near the base of a tree. When sliced into veneer, it exhibits wild swirls and a mottled appearance.

Crotch veneer is cut from a section of the log where a limb branches off from the main trunk. It often exhibits a flame-like appearance.

These veneer types are usually sold in small pieces, like the flitch shown in the main photo. This is because the figured grain typically grows in a small section of the tree. For all but the smallest projects, you'll probably need to join pieces together. While this takes some work, it's also an opportunity to create patterns or designs.

FLATTENING. Burl and crotch veneers tend to curl as they dry. For this reason many veneer retailers flatten veneer by pressing it as it dries. Veneer that's flattened at the mill is easier to work with (see the photo below).

In additon to burl and crotch veneers, there are other types of figure. Depending on the tree's growing conditions, patterns may be seen in the grain like bird's eye, quilted, mottled, blistered, and fiddleback figures.

Raw veneer is great for special projects. But it also requires a bit of skill and patience to use. It can be brittle to work with and has a tendency to crack or split if you're not careful. If this sounds like too much effort, you may want to take a look at backed veneer.

BACKED VENEER. Backed veneer is raw veneer that has been matched and joined at the mill and then permanently bonded to a thin backing of foil, paper, or wood. You can find it in sheets up to 48" wide.

▲ Raw veneer can be purchased pre-flattened, like the sheet shown on the right. The wavy sheet on the left will need to be flattened before it can be cut and applied to the substrate.

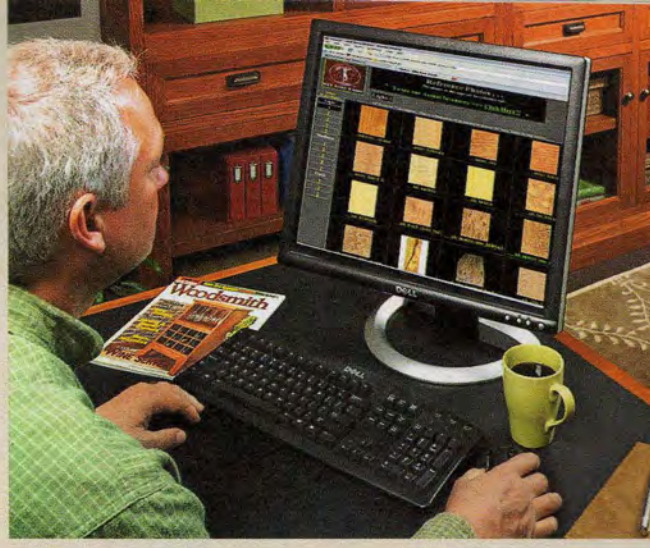

▲ Online veneer vendors post actual photos of their stock, so there are no surprises when you get your shipment.

Some backed veneer has a heat-activated adhesive added to the backing, like that discussed in the box below. Other types need to have adhesive applied, just as you would with raw veneers.

But whichever type you choose, both are extremely easy to work with. They both come out of the box flat, matched, and ready to glue to the substrate.

The backing makes trimming and cutting the veneer easy. You can cut it with a razor blade, and you don't have to worry about cracks or splits like you do with raw veneer.

With this many grain patterns and wood species to choose from, you're sure to find a project that's just waiting for a beautiful veneer design or covering. W

Easy to Use: Adhesive-Backed Veneer

If the idea of gluing and clamping up veneers sounds a little intimidating, you might want to take a look at an alternative — adhesive-backed veneer.

There are two types of adhesive-backed veneers. "Peel-and-stick" veneer uses a strong, pressure-sensitive adhesive. You simply peel off the paper backing and stick the veneer down (see photo at right).

The second type of veneer uses an adhesive that is heat-activated. You simply place the veneer on your project and then run an electric iron over the surface. The heat from the iron activates the adhesive, fixing it in place.

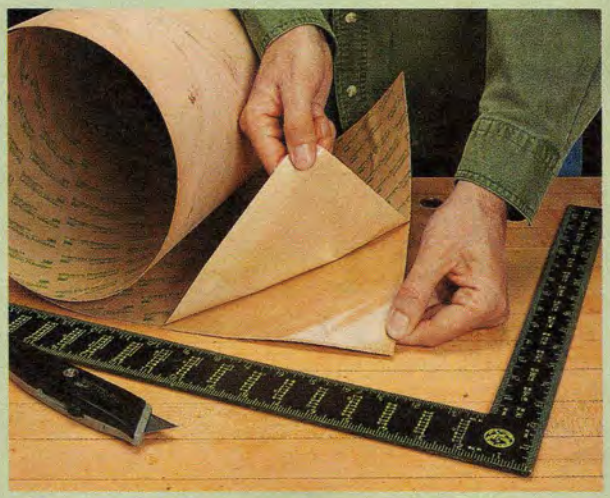

▲ Peel-and-stick veneer comes with a paper backing that you simply peel off to expose a sticky, pressure-sensitive adhesive.

▲ Heat-activated veneer (like this veneer tape) is applied using a warm iron to activate the adhesive.

choosing and using a Dust Collector

The right tool can help you keep chips off the floor and dust out of your lungs.

▲ The pleated filter used in canisters provides plenty of surface area to trap fine dust particles.

Adding a dust collector may be one of the best investments you can make for your health and safety. High-quality collectors are available at several different price levels. But the collectors marketed for home woodworkers have very different capabilities. So it's easy for a woodworker to be confused.

I tried out a few dust collectors that represent the different sizes and styles. Rather than using expensive test equipment, I simply tried to find out how well each performed on common shop tasks like collecting chips from a planer.

I also set up different configurations of ductwork to see just how well each would perform in realistic shop situations. Here are some tips and suggestions for choosing and employing a dust collector to your best advantage.

SIZE MATTERS. The first thing to consider when shopping for a dust collector is the size of the unit. If you have a very small shop, you probably don't want to give up the floor space required by the larger collectors. On the other hand, in a large shop with several stationary tools, a larger collector might be the only way to capture the chips and dust.

In addition to the size of the collector, you'll find two important ratings: the horsepower (hp) of the motor, and the cubic feet per minute (CFM) of airflow the unit is capable of generating. The higher the airflow, the greater the capability of the collector. The good news is there are enough options on the market to suit just about any size shop.

SMALL. A ¾-hp, 650 CFM collector, like the wall-mounted unit shown on the opposite page might be the perfect solution for a small shop. It's small enough to move around the shop as needed and conveniently hangs on the wall, out of the way of your tools.

In spite of its small size, I found this type of unit worked very well.

With a ten-foot section of hose attached, it collects planer and jointer shavings very well. And since it's so easy to move, you'll probably never need to use a longer hose. This is a big step up from trying to collect dust with a shop vacuum. With a price of $199, it won't break the bank either.

On the downside, the filter bag also doubles as the collection bag. This means that the air has to move through the dust on its return path into the shop. And the 30-micron bag allows quite a bit of fine dust back into the air. Fortunately, *Rockler* also sells a 5-micron replacement bag for around $25.

MEDIUM. The next step up is a collector like the one shown below. Typically equipped with a 1-hp motor and rated to generate around 700 CFM, this style is a good choice for a small shop with only a few stationary power tools.

Collectors of this size also use disposable plastic collection bags for the chips and dust. This not only separates the chip collection from the air filtration, but it makes them a lot easier to keep clean than having to empty and clean a cloth bag.

This type of collector works well with up to 15 feet of hose, but is still too small to serve a duct system connected to more than one tool at a time. Another limitation of this size and style collector is that most only have a single inlet.

Units similar to this are sold by a number of different manufacturers for around $300. But the thing I like about the *Steel City* collector is that it comes with a 1-micron filter bag as standard equipment.

▲ This wall-mounted dust collector from *Rockler* is small enough to take down and carry to any location in the shop (inset photo).

LARGE. If you have a larger shop and want to set up a duct system connected to multiple tools, the 1½-hp, 1100-1200 CFM models, like the one shown in the main photo are just the ticket. Collectors of this size are about as large as you can go without requiring 220-volt service to your shop.

In addition to providing plenty of collection power, many manufacturers offer pleated filter cartridges to replace the bag-style filters. These cartridges capture dust down to 1 micron and the pleated filter provides an extremely large surface area to improve filtration.

As you can see in the inset photo on the opposite page, the *Jet* canister also features "sweepers" to help remove dust from the pleats. Just give the handle a few turns and paddles will knock loose most of the dust.

With these larger collectors you can set up fixed collection ducts for added convenience. I'll show you a few ideas for setting up a collection network on the next page.

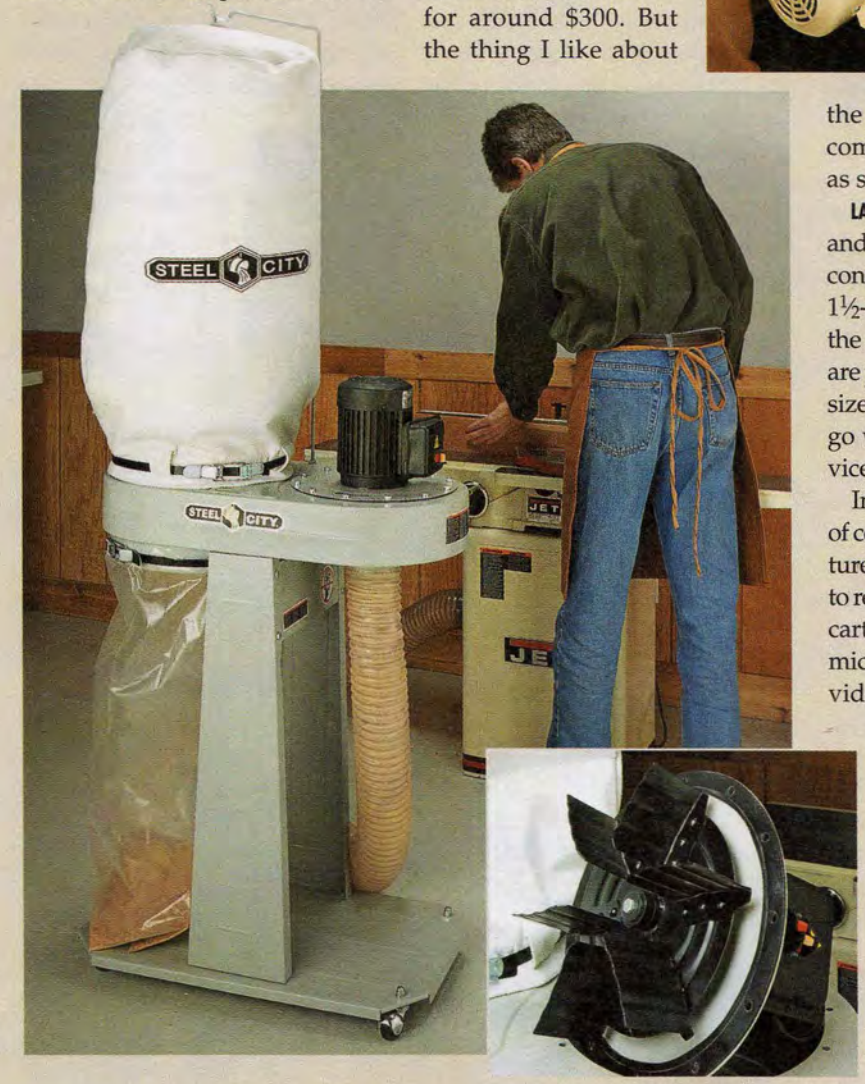

▲ This 1-hp model from *Steel City* is an excellent single-tool collector for the small shop. In the inset photo, you can see the curved, stamped-steel impeller that provides the airflow.

DUCTING YOUR SHOP

While it's fine to rely on swapping a length of hose between tools in a small shop, in a larger setting this will get old in a hurry. One of the biggest benefits a larger dust collector offers is that it has the power to run a fixed system of collection ducts throughout your shop. This means you can hook up a collection pipe to each of your stationary tools and capture the dust and chips with the flip of a switch.

DUCTING MATERIALS. To set up your shop with permanent ductwork, you'll first need to decide what type of ducting to use. Once again, you have a few options to choose from depending on your budget and situation.

METAL DUCTS. In large production shops and other industrial settings, metal ductwork is standard. This is the OSHA-approved solution — and it's a good one. Metal ductwork offers a couple of advantages. First, the smooth walls allow air to move with little resistance. Second, since the metal is grounded, there's no need to be concerned about a static discharge sparking the dust inside the collector and causing a fire. (I'll address this concern a little later.)

The only problem with metal ductwork is that it's expensive. For example, a high-quality Y-fitting can cost over $100. That puts the total cost of a collection system out of reach for most home shops. It's important to understand that the metal ductwork sold at the home center for furnace ducting isn't designed for this application. It's too light and can collapse when under negative pressure.

FLEXIBLE HOSE. Dust collector manufacturers also offer black plastic fittings to be used with hose as a ducting option. In my view, this is the least-effective solution. Hose is not very efficient over long runs. The corrugated interior walls create turbulence in the airflow, reducing the performance.

PVC. For good airflow at an economical price, many users turn to 4" PVC pipe. In addition to the low cost, PVC is available at most home centers. And as you can see in the photos below, elbows, Y-fittings, and connectors can be used with straight pipe to build a complete collection system. The key to putting together a PVC system is a special adapter from *Rockler* to make the initial connection to the collector. After that, it's easy to build just about any configuration.

STATIC DISCHARGE. One concern about using PVC is the possibility of static electricity building up and causing a spark in your collector. Studies suggest this is highly unlikely to happen with dust collectors in a home shop.

To alleviate any fears, you can always use copper wire to ground the ducts. In fact, grounding kits, like the one shown in the margin photo, are available for this very purpose. You'll find grounding the system helps prevent annoying shocks as well.

START WITH A LAYOUT. No matter which type of material you choose, adding ducting isn't difficult. But it does require a good plan before you begin. And the planning process might make you rethink the way you lay out the tools in your shop. You'll find any collection system works best when you keep the duct runs as short as possible.

A good place to start is to make a scale drawing of your shop and tools to experiment with different layouts. The drawing on the opposite page is a good example. Try to keep the biggest dust producers closest to the collector and add a blast gate for each tool.

BLAST GATES. To channel your dust collector's airflow from a particular tool, you need to be able to close off the unused portions of the network. The easiest way to do this is to incorporate blast gates (photo below) into the design. Blast gates are simply sliding

An inexpensive wiring kit makes it easy to ground your ductwork. ▼

doors that fit between two sections of pipe. By closing the door, you reduce the airflow in the network, focusing it on an open gate.

Even though the 1½-hp collectors are powerful, it's still a good idea to only have one gate open at a time to keep up a strong airflow to pull dust and chips.

I find it's best to place a gate on each stationary tool, positioning it for easy accessibility. Sometimes this means placing it on a branch in the duct work, as shown above. But there are times when it pays to have the gate right at the tool's dust port for convenience and ease of use.

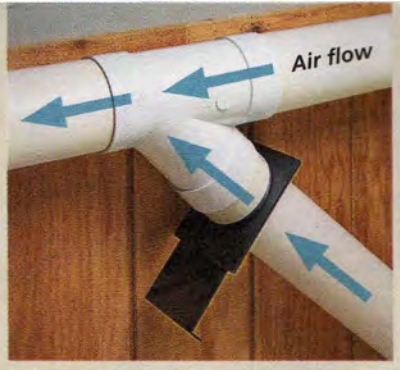

▲ When branching off a main duct, a 45° Y-fitting provides smooth airflow to the tool.

▲ To maintain better air flow in the system, consider using two 45° bends rather than a single 90° fitting in the corners.

USE GENTLE BENDS. Another general rule for keeping your system at its highest efficiency is to avoid 90° bends when possible. You can usually incorporate two 45° elbows instead and accomplish the same result, but without restricting airflow as much. A gradual bend is also less likely to get clogged with debris. The photo above shows you what I mean.

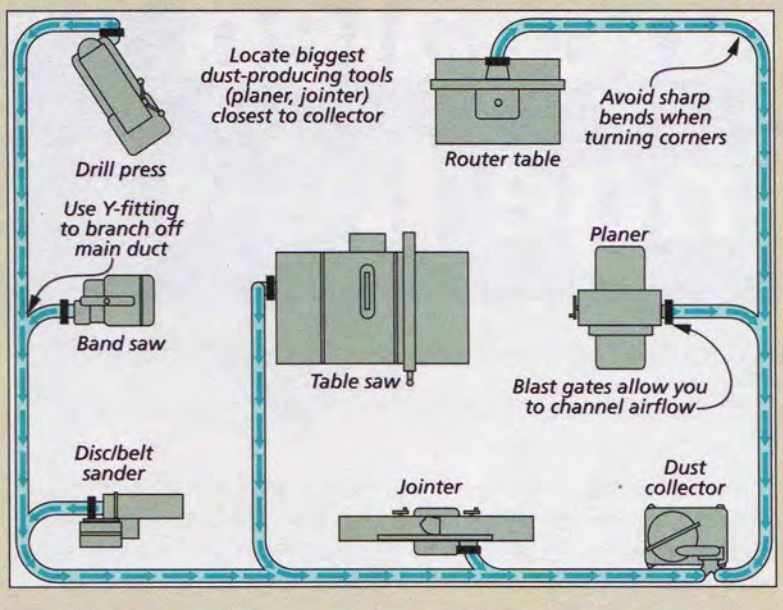

SYSTEM MAINTENANCE. No matter how careful you are about laying out and installing the ductwork, there are still things that can cause it to lose some of its collection power over time. Fortunately, most of these can be prevented with simple checks and maintenance.

For example, any blockages in the ductwork will cause a severe restriction. That's why I leave a few connections with only a friction fit and no glue. This way, you can easily remove a duct to check for and remove obstructions. It's also a good idea to periodically inspect all your hoses and ducts for leaks.

COLLECTOR EFFICIENCY. Dust collectors rely on a large volume of air coming in and going out to create airflow. When the collection bag fills up, that volume is decreased and so is the effectiveness of your collector. I usually empty the bag when it's half full.

Another frequent cause of reduced airflow is dust buildup in the filter bag or canister. For bags, you can remove them and in most cases even wash them to remove excessive buildup. But with a canister filter, you'll need to pull it off and give it a thorough cleaning from time to time. A shop vacuum works great for this.

No matter what size or style you choose, you're sure to appreciate the convenience of a dust collector in your shop. By keeping chips off the floor and dust out of the air, it will make it safer too. W

Worth a Look: Cyclone Lid

Large dust collectors often incorporate a cyclone separator to collect the larger chips before they arrive at the impeller and bag. For home shops, a simple plastic lid for a trash barrel can provide the same benefit.

A hose from the collector fits on the top and a second hose is routed to the tool. This way, large chips are collected in the barrel. Since it's easier to empty the barrel than it is to remove and replace the bag, this can be a handy addition to your system.

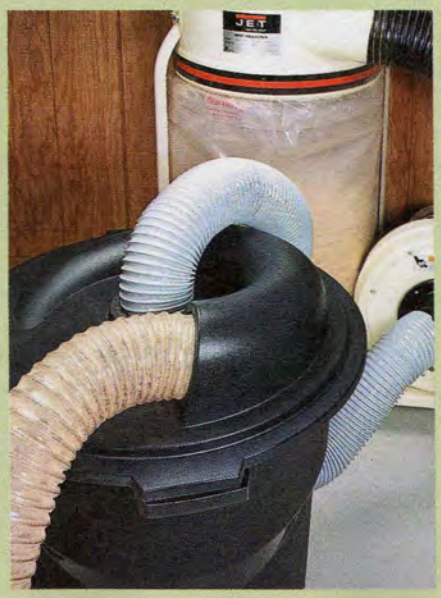

Rockler's Concealed Hinge JIG-IT

This easy-to-use jig makes drilling the cup holes for Euro-style hinges a virtually foolproof operation.

▼ The Rockler Concealed Hinge JIG-IT makes the installation of Euro-style hinges even easier.

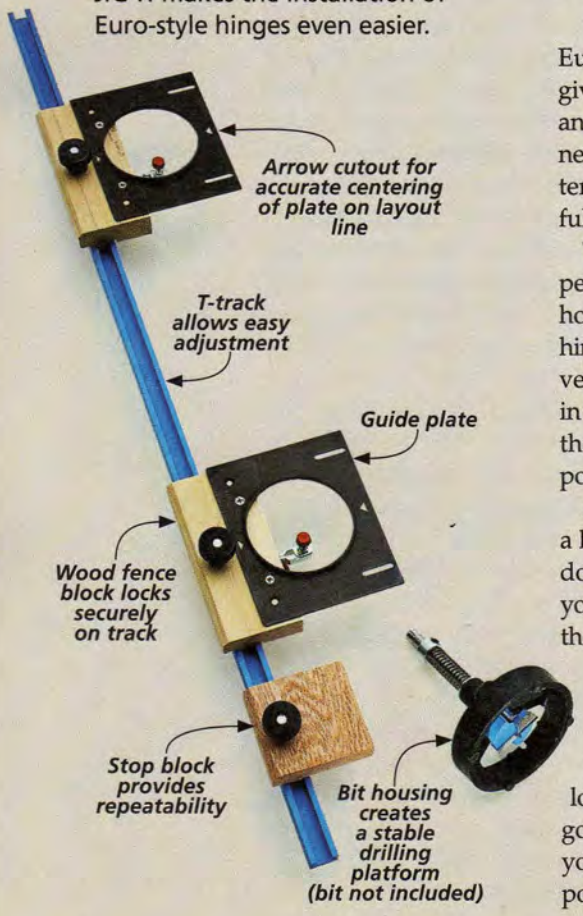

European-style, or concealed, hinges give woodworkers a very handy design and installation option for hanging cabinet doors. They provide a clean, uncluttered look, are easy to install, and are fully adjustable afterward.

The only real challenge in using European hinges is drilling the 35 mm cup hole (about 1⅜") needed to mount the hinge to the door. These holes are located very close to the edge of the door. And in order for the hinge to work properly, they need to be drilled squarely and positioned accurately.

Attempting to drill the large holes with a hand-held drill is not a good bet. You don't have enough control. And while you can do this job at the drill press, even there, the task can be awkward.

A GOOD SOLUTION. The folks at *Rockler* recognized the problem and came up with a handy solution — the *Concealed Hinge Multi-tool JIG-IT.* A look at the photo above gives you a good idea of what the *JIG-IT* will do for you. In essence, the jig functions as a portable drill press — allowing you to drill the cup holes very cleanly and to a precise depth with just a hand drill.

That's only part of the package. It also automatically locates the hole the correct distance from the edge of the door. This offset is important to proper operation of each particular type of hinge. And the jig offers accurate, multiple-hinge spacing along the length of a door as well as easy repeatability from one door to another.

THE PACKAGE. After giving the *JIG-IT* a thorough trial, I was impressed by the well-thought-out design and ease of use. The parts of the jig are shown at left — two guide plate/fence block assemblies, a stop block, a 30" length of T-track, and a drill bit housing. (Extra guide assemblies can be purchased for three-plus hinge applications.)

STABLE DRILLING. At first glance, the operation of the guide plates and drill bit housing is not easy to grasp. But with a closer look, you find a very practical and efficient design at work.

In the center of the thin metal guide plate is an oversized hole with a raised rim. The hole is used in conjunction with

the hard plastic drill bit housing, as you see in the photo at right.

The bit (you'll need to have a long shank bit) is inserted through the center of the housing before being chucked into the drill. Then, when drilling the cup hole, the bit housing rests snugly over the raised rim of the guide plate. A stiff spring holds the bit above the surface until you're ready to drill the hole. Then an adjustable stop collar is used to accurately control its depth.

The benefits to this arrangement are easy to see. The housing allows the bit to travel freely while keeping it stable. With only minor effort on your part, the cup hole will be clean, right on the mark, perfectly straight, and accurate in depth.

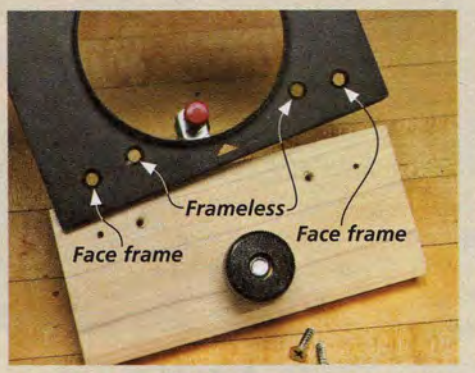

▲ Two sets of fence positioning holes allow you to set up for face frame or frameless applications.

EASY SETUP. The designers of the jig gave equal consideration to quick and easy setup. The wood fence block registers against the edge of the door for easy positioning of the guide plate. Two sets of pre-drilled fence mounting holes offer the correct offset for frameless and face frame applications (photo at left). For custom offsets, there are a pair of slotted holes at the opposite edge of the plate (right photo).

The only layout needed is a line (or lines) perpendicular to the edge of the door marking the center of the cup hole. Triangular cutouts in the guide plate then allow you to center it on the layout line. And once in place, a small toggle clamp on the bottom of the fence block makes it easy to firmly lock the guide assembly to the door (right inset photo).

MULTIPLE HINGES. T-track linking the two guide assemblies allows efficient multiple-hinge setup. The fence blocks slide effortlessly along the track and are easily tightened down with a flange bolt and knob. You just space the guides appropriately and lock them down. And if you want to use the same setup to drill two or more doors, you can set the stop block to reference off one end of the door.

From my standpoint, the *JIG-IT* has all the bases covered. And if you rely on the ease and versatility that European-style hinges offer, spending $90 on this tool might be a great investment. But before deciding, check out another cup hole drilling guide shown below. You'll find source information for both jigs on page 51.

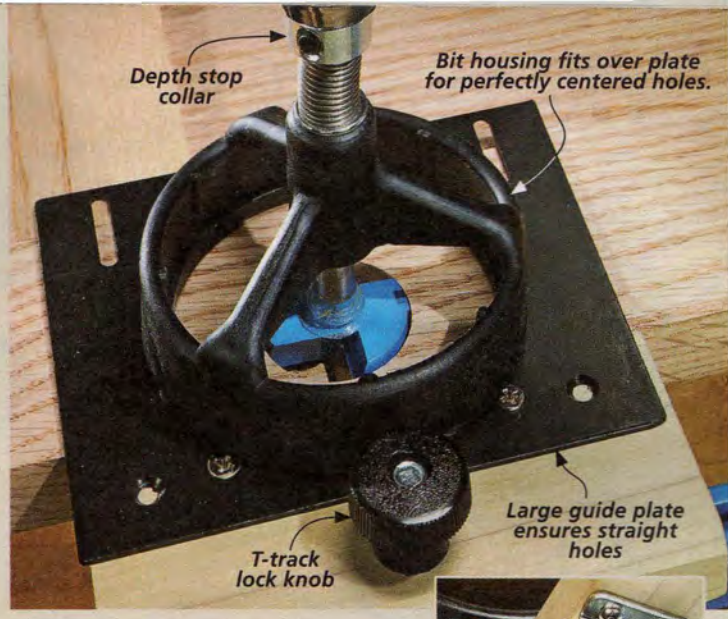

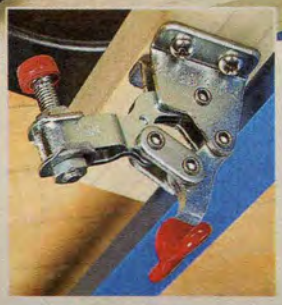

▲ Small toggle clamps on the bottom of the fence blocks hold the jig securely to the door.

Another Option: The Euro-Eze II

If you're willing to trade ease-of-use for a bit more versatility, you might consider the *Euro-Eze II* ($85). As you can see at right, it uses a four-sided plastic plate with a 35 mm guide hole in the center. The fence can be attached to any side of the plate to create a different hole offset — 3 mm to 6 mm. And a series of smaller guide holes around the main hole allows you to drill the screw holes for installing the hinge with the same setup.

To drill the hole to depth, you simply insert a bit fitted with an adjustable depth stop through the guide hole in the plate.

The two guide plates can be spaced along a steel rod and fixed with toggle clamps. But I found that adjusting the plates was tricky and no end stop is included.

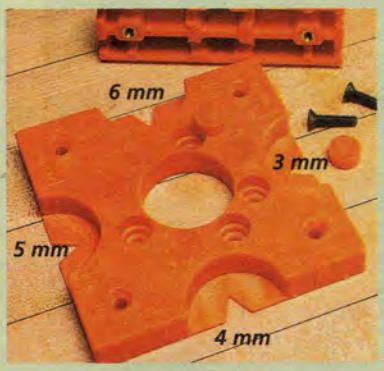

◄ Offsets from 3 to 6 mm are achieved by attaching the fence to different sides of the guide plate.

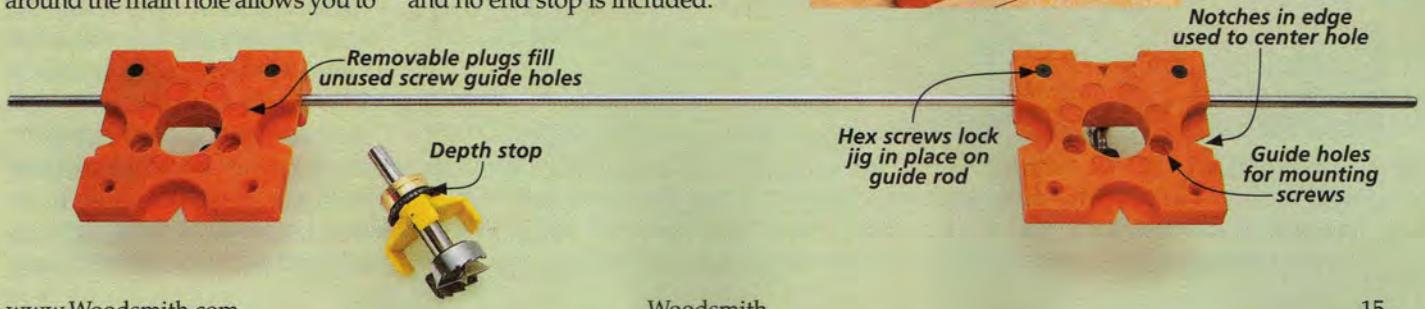

box-jointed Silverware Tray

▲ You might decide that making more than one tray is a good idea. This project offers a great opportunity to explore the possibilities in using different woods and finishes.

This small project gives you a chance to learn a great technique — angled box joints.

If you like to frequent antique stores, as I do, there's a good chance you've seen a tray similar to the one shown above. At one time, these handled trays were pretty common and essential. Before the days of abundant kitchen storage, they held the knives, forks, and spoons that saw everyday use. The tray provided a handy way to transport the silverware to the dining table and store it in between meals.

Although this original purpose might be somewhat obsolete, I don't think you'll have any trouble finding a way to keep this tray full. Craft, sewing, or hobby supplies — just about any small objects that need to be carried from place to place or simply stored are fair game.

Traditionally, these trays were made in a variety of styles and with a range of joinery techniques. Ours combines the best of the bunch — splayed sides joined with box joints, a nicely contoured divider, and a comfortable and stylish "turned" handle. From a woodworking standpoint, this small project offers a great way to learn some new skills without being overwhelmed.

And once you've worked out the techniques and are set up to make one tray, you might decide to go ahead and make several. I'm sure you'll find plenty of willing takers.

cutting the TRAY SIDES

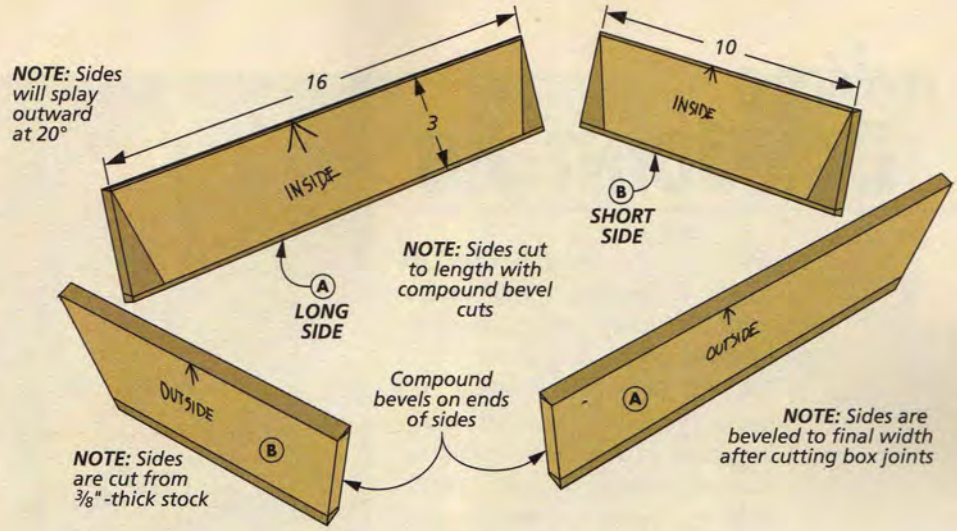

The most interesting and challenging parts of this project come up front. These tasks involve first cutting the sides to shape and then making the angled box joints. After this is completed, the rest of the work is all downhill.

COMPOUND BEVELS. The splayed shape of the tray is created by cutting compound bevels on the ends of the sides. This means the pieces are beveled across their width and through their thickness, as shown in the drawing at right.

So the first step is to cut the sides to length with compound bevel cuts. Then you can tackle the box joints. The sides of the tray splay outward at an angle of 20°. But you'll need to use two different angles to make the compound bevel cuts on the sides — one for the tilt of the table saw blade and one for the miter gauge setting.

TEMPLATES. You'll find that making the cuts is easy, the real trick is setting up the saw accurately. A good solution is to make a hardboard template of the two angles you need to use during setup. You can use the pattern drawings in the right margin to help you get the two angles right. Simply compare the angle cuts on the template to the pattern drawings.

ROUGH SIZE. You can start by cutting the sides to rough length and an initial width of 3". (You'll bevel them to final width later.)

LABELS. Before you go any further, take a minute to arrange the pieces and clearly label the inside and outside, and the top edge, as shown in the drawing above. This is pretty important. When you start cutting the angles, and later the box joints, the labels will help you keep the pieces oriented properly.

FIRST CUTS. Now you can use your template to set up the table saw. You'll need to make two separate series of cuts using opposite miter gauge settings. The first series is made with the face of the miter gauge angled toward the blade (lower left drawing).

After testing your setup, you can make a cut on one end of each side, making certain the pieces are oriented as shown in the left drawing below. You want the inside face up and the top edge of the piece registered against the fence.

STOP BLOCK. Next, use the template to reset the miter gauge for the next series of cuts (right drawing below). At this point, the sides will be cut to final length, so I used this same setup to cut a beveled stop block. Clamped to the fence, it will ensure the pieces are identical and the tray ends up square.

REORIENT. This time around, the inside face is still up, but the bottom edge of each piece is against the fence. First, cut the long sides to length, then reset the stop block before cutting the short sides.

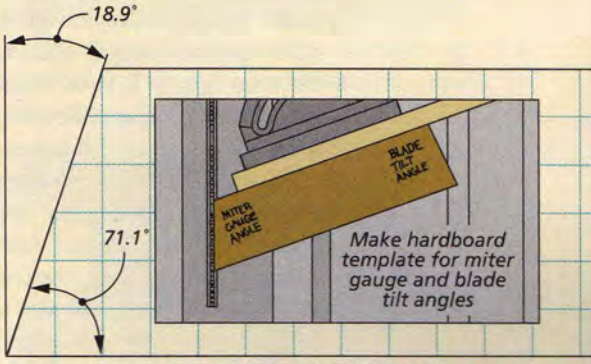

PATTERN FOR MITER GAUGE ANGLE

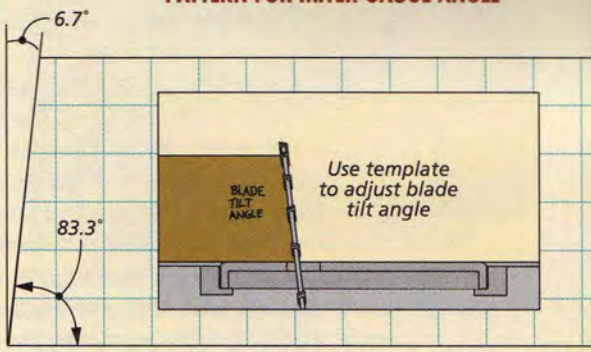

PATTERN FOR BLADE TILT ANGLE

How-To: Cut Compound Bevels

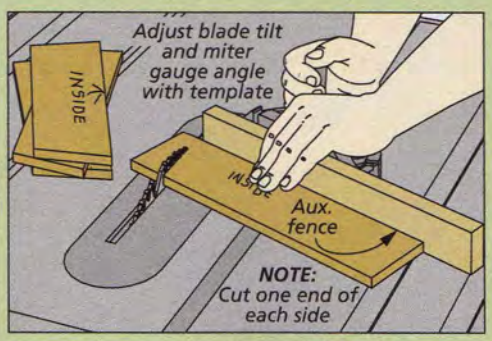

Bevel One End. *After adjusting the miter gauge and the blade tilt, bevel one end with the pieces oriented as shown above.*

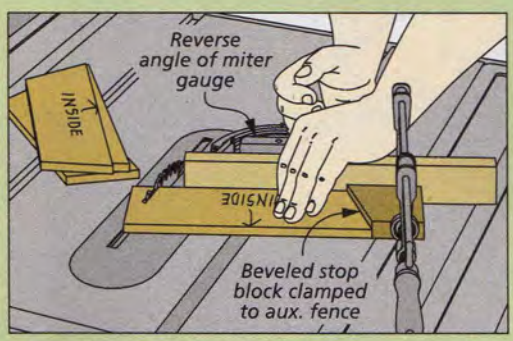

Final Size. *Readjust the miter gauge and then use a beveled stop block to cut the long and short sides to their final length.*

making a BOX-JOINT JIG

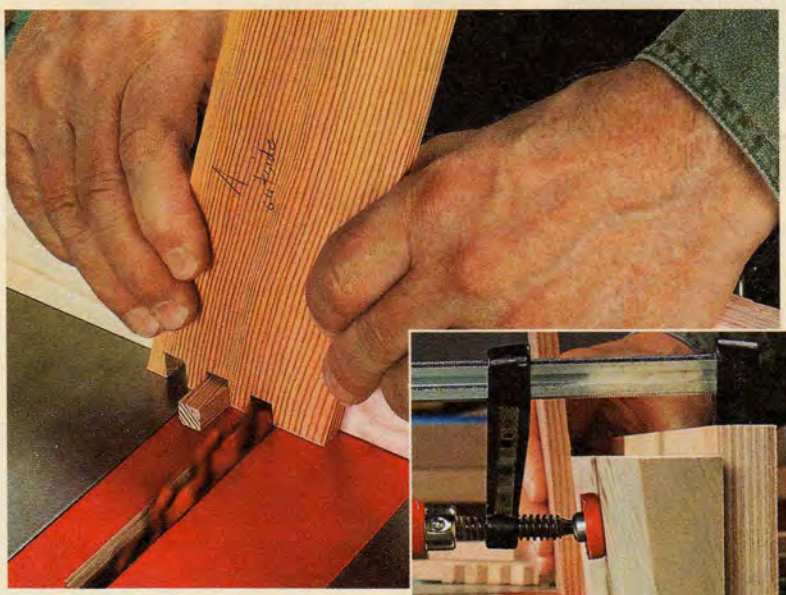

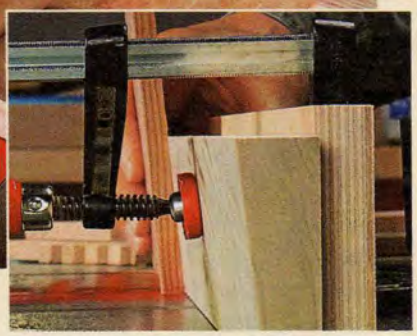

With the tray sides beveled to length, you're ready to start on the angled box joints. This is a lot easier than you might think.

A BRIEF EXPLANATION. Cutting the angled box joints is similar to making standard box joints. To cut the slots and create the pins, you'll hold the pieces on end as you pass them over a ⅜"-wide dado blade (the width of the pins and slots). An indexing jig clamped to the miter gauge is used to steady the pieces and space the cuts. But there are a few key differences.

For the joint to fit right, the slots should be cut square to the beveled ends of the sides. This means that when making the cuts, the ends of the pieces are flat on the saw table. To do this, the piece has to be tilted forward and angled to the left or right (depending on which half of the joint you're cutting).

A DIFFERENT JIG. Tilting the piece left or right is no big deal. The long bevel resting against the table provides plenty of stability, as in the main photo. The trick is maintaining the proper forward "lean" of the sides when making the cuts. The answer to this problem is seen in the inset photo. I simply beveled the face of the fence to the angle of the short end bevel (6.7°).

MAKE THE JIG. So with this in mind, you can make and set up the box-joint jig. The How-To drawings below show you the basics.

The only parts are the beveled fence, an indexing pin, and a matching spacer. First, I cut the beveled fence to size and then I made a ⅜"-square indexing pin and spacer. Now you can install a ⅜"-wide dado blade to cut the slots.

THREE SLOTS. The beveled fence has three, ⅜"-wide slots cut into the face. The center slot is the dado blade kerf, the slots on either side hold the indexing pin. The slots are spaced exactly ⅜" apart and this is where the spacer starts to come in handy (middle drawing below).

The right drawing shows the initial jig setup you'll use. The slots are positioned so that the fence can extend across the blade. This allows you to hold the workpieces on both sides. The fence is simply clamped to the miter gauge with the center slot aligned with the blade. Clamping the jig to the miter gauge allows you to adjust it easily.

You want the indexing pin to fit snugly in the slots, but don't glue it in place. When cutting the joints, you'll need to move it from one side of the blade to the other.

How-To: Make the Jig

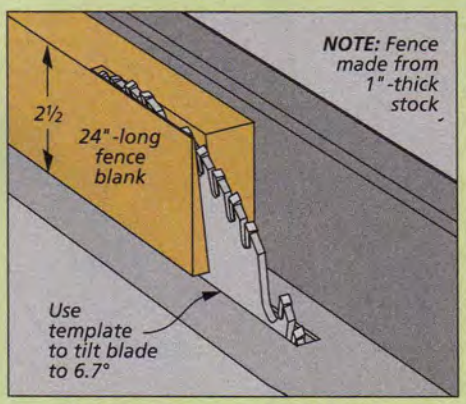

Beveled Fence. *Start the jig by beveling the face of a piece of 1"-thick stock. Use your template to set the tilt of the blade.*

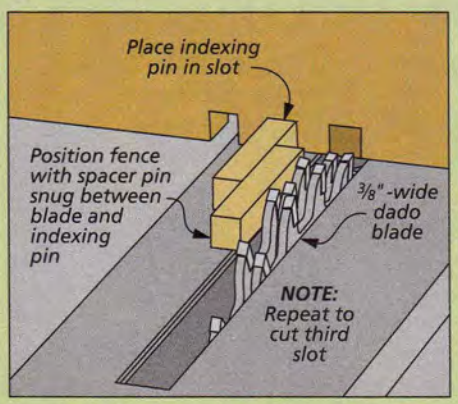

Spacer. *After cutting the first slot, use the indexing pin and spacer pin to position the fence to cut the next two slots.*

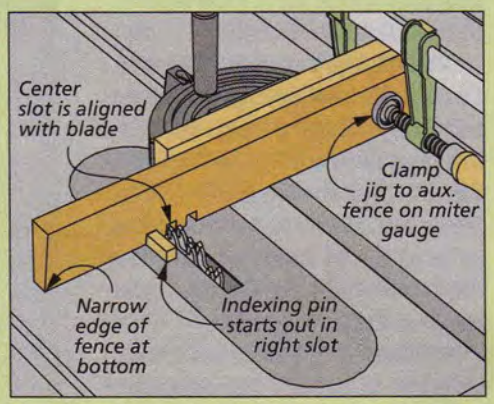

Ready to Go. *For the initial box-joint cuts, you'll have the center slot aligned with the blade and the indexing pin in the right slot.*

cutting the BOX JOINTS

You're about ready to cut the box joints. But before getting started, you need to test the setup of the jig. The box below explains it all.

STEP-BY-STEP. When the jig checks out, you can start on the actual joints. The sequence of the cuts you'll make is shown in the step-by-step drawings at right.

The cuts go quickly, but don't be in a hurry. Make sure you do things in the right order and with the pieces in the right orientation.

For all of the cuts, the inside face of the piece should be facing you. And you'll always make the first cut at the top of each piece and work toward the bottom.

LEFT TILT. Cut one end of each short side, and then one end of each long side with the pieces tilting left.

NOW RIGHT. Now move the pin to the left side of the blade to cut the mating halves of the joints. When you make this switch, cut another test piece and readjust the jig if necessary. Compare this test piece to one of the sides you just cut.

The mating halves of the joints are cut in the same order with the pieces tilting in the opposite direction, as shown. The two ends of each piece will be mirror images.

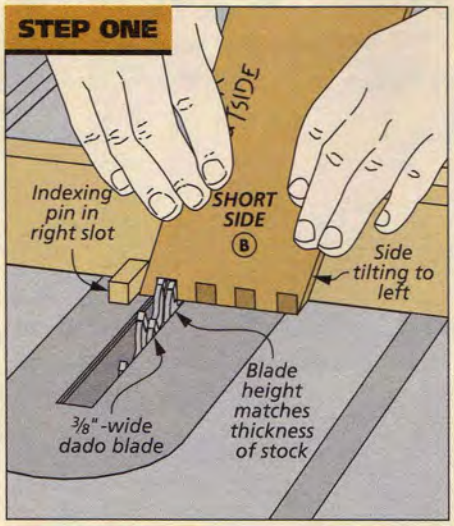

Short Sides. *Start with one end of each short side. Tilt the piece to the left and butt it up to the pin to cut the first slot.*

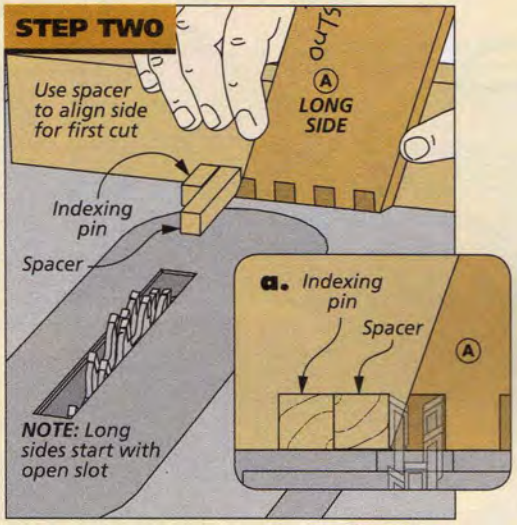

Long Sides. *The long sides start with an open slot at the top. Use the spacer to position the piece for the first cut.*

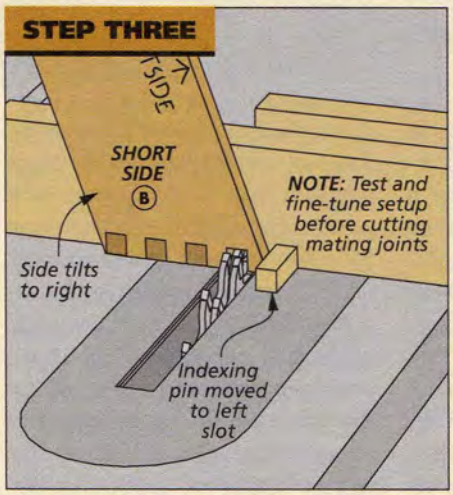

Right Tilt. *With the pin on the left side of the blade and the pieces tilted to the right, cut the other end of the two short sides.*

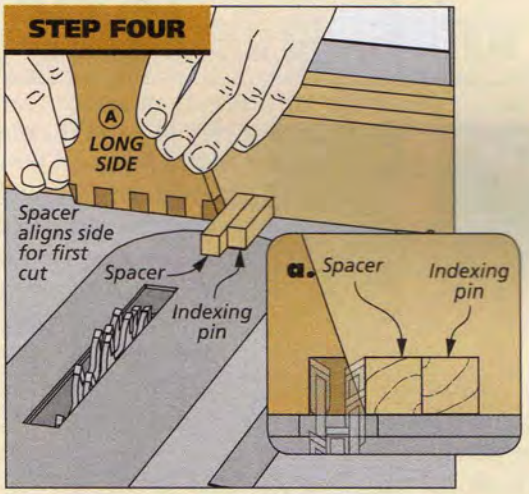

Repeat. *The final series of cuts is made on the long sides. Again, use the spacer pin to create an open slot at the top edges.*

Fine-Tune the Fit

Once the jig is adjusted properly, making the actual cuts only takes a few minutes. So you can afford to make as many test cuts as necessary to get it right.

The goal is pins and slots that are a very close match — not too tight or too loose, as in the near right drawing. To achieve this, you simply tweak the spacing between the indexing pin and the blade.

I made test cuts on square pieces to adjust the setup. Butt a test piece up to the pin and cut a slot. Lift the piece, place the slot over the pin, and make another cut. Repeat this to the end of the piece.

After cutting a second piece, test the fit. If the joint pins are too wide, slide the indexing pin closer to the blade (upper right drawing). If too narrow, move the indexing pin farther away (lower drawing).

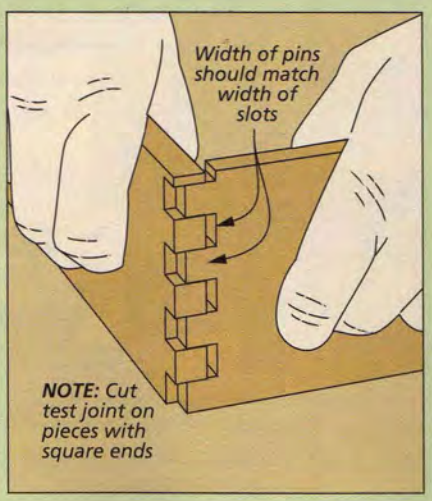

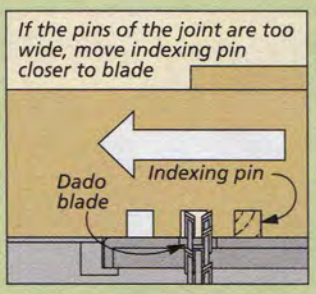

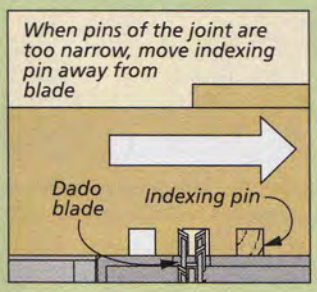

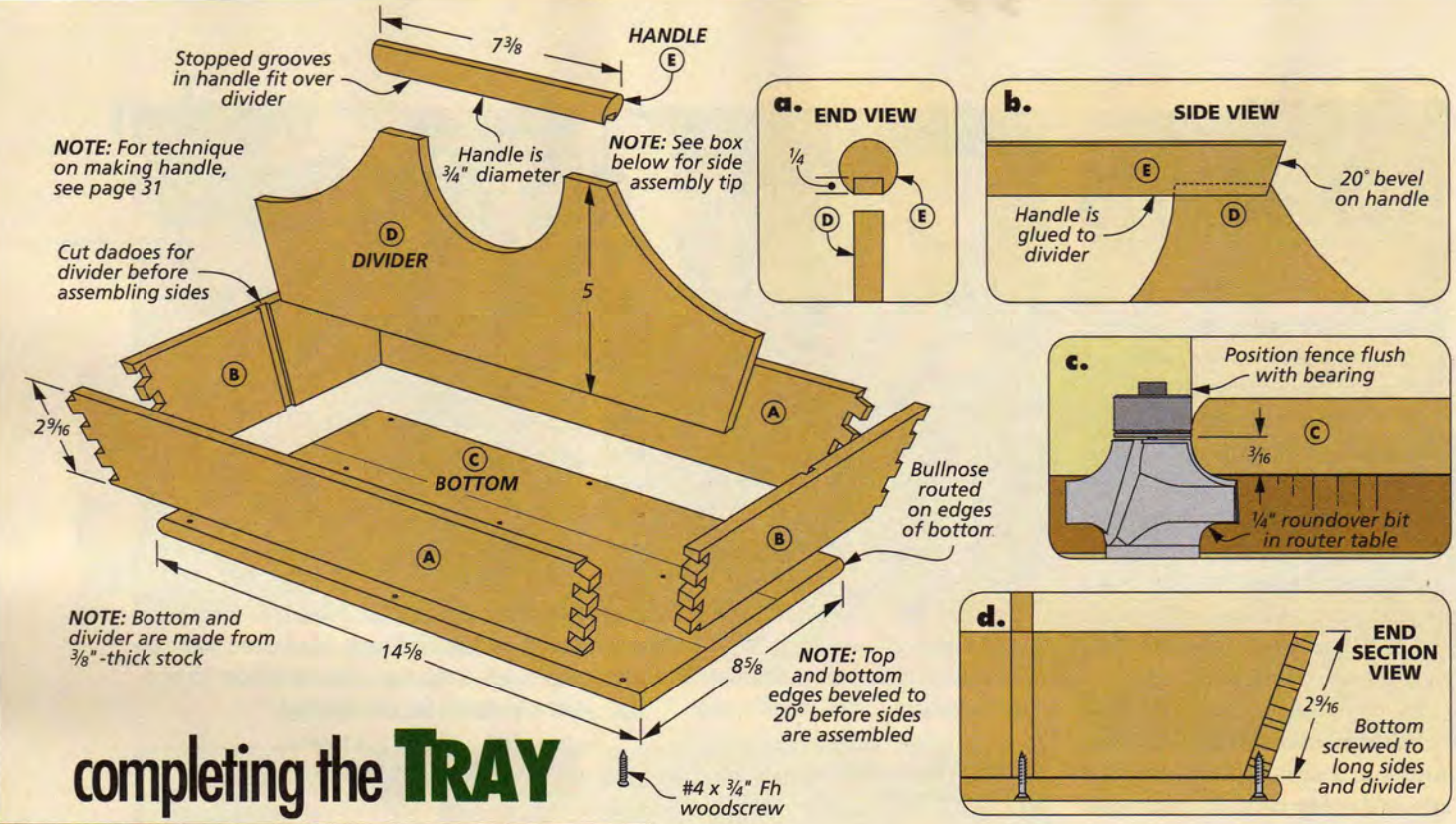

completing the TRAY

▲ Self-adhesive sandpaper stuck to the saw table makes sanding the sides easy.

Now that you've passed the angled box joint test, completing the tray will be a walk in the park. But before you can glue up the tray sides, you have a couple of simple chores to perform.

DIVIDER DADOES. The tray divider is captured in shallow dadoes centered on the short sides. You already have a leg up on this job. These 3/8"-wide dadoes can be cut with the dado blade used on the box joints.

The left drawing below shows how I used the rip fence to help align the dadoes in the two sides. The key here is to make the cuts as mirror images. This way the divider will be perfectly aligned between the sides. Be sure to cut the dadoes on the inside face of the pieces.

EDGE BEVELS. That's it for the dado blade. You can swap it out for a standard blade and set up to cut the bevels on the top and bottom edges of the sides and ends. The angle of the bevel cuts matches the splay of the sides — 20°. And at the risk of sounding like a broken record, the orientation of the pieces during the cuts has to be right.

I cut the top bevel first, as shown in the middle drawing below. The outside face is up and you'll trim only enough to create a full bevel.

Most of the waste is trimmed from the bottom edges. This will balance the spacing of the box joints across the sides. For these cuts, the pieces are flipped and you'll be seeing your inside marking. The final width of the sides is 2 9/16" measured across one face (detail 'd').

NO CLAMP GLUEUP. Due to the splay of the sides, using clamps to pull the joints tight would be a challenge. So I didn't try.

How-To: Tray Side Details

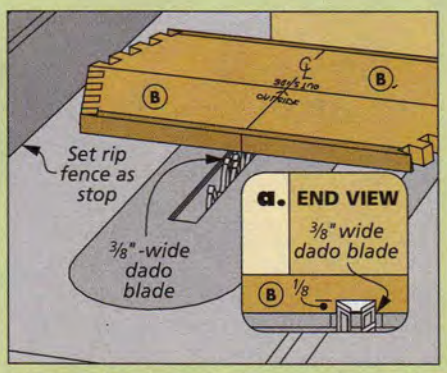

The Dadoes. *Stack the two short sides top-edge-to-top-edge to cut perfectly aligned dadoes for the tray divider.*

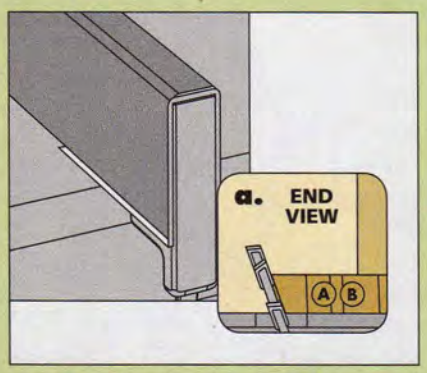

Top Bevel. *When beveling the tops of the sides, remove only enough material to create a complete bevel.*

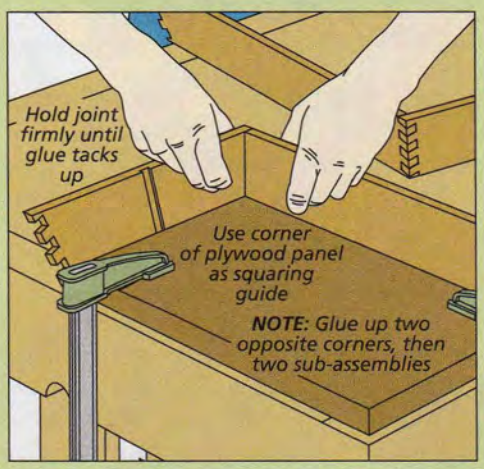

Manual Clamps. *I assembled two opposite joints by holding the pieces together around the square corner of a piece of plywood.*

The lower right drawing on the opposite page shows how I simply held the joint in place for a minute or two until the glue tacked up. First, I assembled two opposite corners of the tray, then the two subassemblies can be glued together.

ADD THE BOTTOM. Once the glue is dry, you'll want to do a little sanding before adding the bottom (margin photo, opposite page). The bottom is a ⅜"-thick panel with a bullnose routed on the edges (detail 'c,' opposite page). It's fastened to the bottom of the tray with small screws (main drawing and detail 'd' on the opposite page). The splayed sides don't offer much room for error, so be careful when installing the screws.

NOW, THE DIVIDER. With the bottom in place, you can make the profiled divider next. First, you'll fit the divider to the tray, then the curves can be laid out and shaped.

I started with an oversized blank cut from ⅜"-thick stock. Then I trimmed one end at 20° (Step One). After taking a rough dado-to-dado measurement across the bottom of the tray, I marked the divider and beveled the opposite end slightly over length (Step Two). Now you can test the fit, as in Step Three, and trim as necessary until the divider "bottoms out" in the tray.

PROFILE. After fitting the divider, you can start work on shaping its profile. The drawing at right gives you the dimensions needed.

The curves can be drawn with a compass. The top of the short sides are the lower reference points for drawing the outer curves. The inner curve is just a centered radius.

It's a quick job to cut the divider to rough shape on the band saw. But take your time smoothing the cuts with a sanding drum on the drill press (Step Four).

GLUE AND MORE SCREWS. When you're satisfied, you can glue the divider in place. Then I added another row of screws through the bottom.

ADD THE HANDLE. That leaves only the round handle. The handle is just a section of ¾"-dia. dowel, grooved to fit over the divider, and beveled on the ends. There's not much to it, but the technique used to make the handle is pretty interesting. You'll find a detailed explanation on page 31.

With the handle installed, all that's left is the finish. And fortunately, this won't take long, because I'm sure someone is anxious to put the tray to good use. W

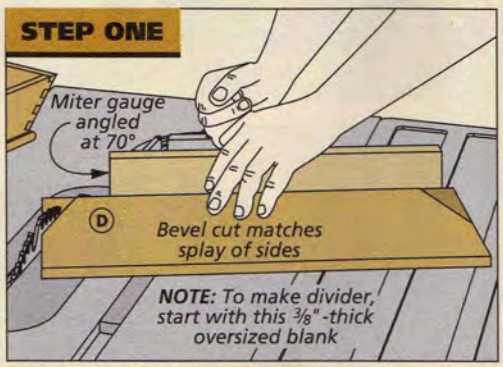

Bevel One End. *To begin fitting the divider blank to the beveled tray sides and bottom, use the miter gauge to cut a 20° bevel on one end.*

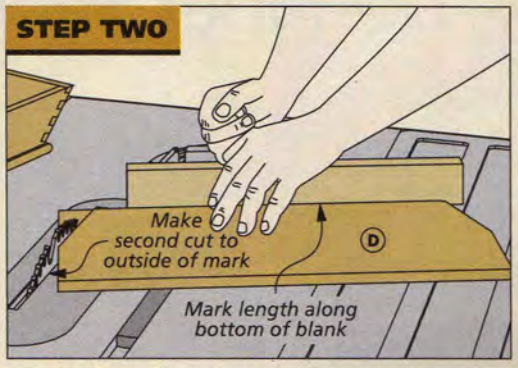

Second Bevel. *After measuring and marking the blank for the opposite bevel, make an initial cut to the outside of your layout mark.*

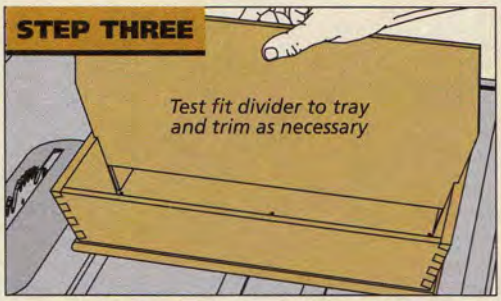

Test and Trim. *Place the beveled blank in the dadoes to test the fit. Trim as necessary until it slides all the way to the bottom of the tray.*

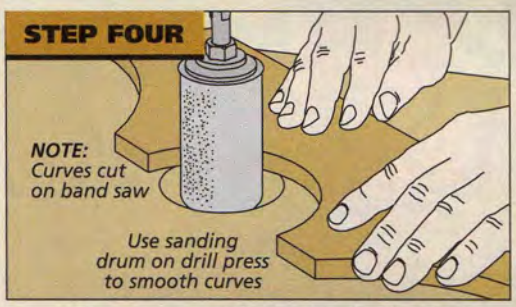

Smooth Curves. *With the blank fit, I laid out the curves, cut them at the band saw, and finally smoothed the cuts with a sanding drum.*

PATTERN FOR DIVIDER PROFILE

Dimensions given can be used to lay out curves on divider blank

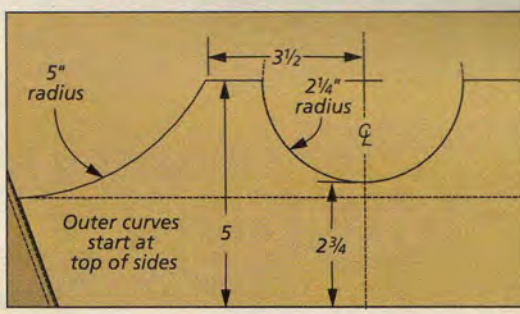

A Comfortable Handle. *Adding a simple handle to the tray turns it into a very useful tote. You'll find the technique for making the handle on page 31.*

Materials, Supplies & Cutting Diagram

A	Long Sides (2)	⅜ x 2 9/16 - 16	**D**	Divider (1)	⅜ x 5 - 16 rgh.
B	Short Sides (2)	⅜ x 2 9/16 - 10	**E**	Handle (1)	¾ x ¾ - 7⅜
C	Bottom (1)	⅜ x 8⅝ - 14⅝	•	(9) #4 x ¾" Fh Woodscrews	

¾" x 6½" - 84" Vertical Grain Fir (3.8 Bd. Ft.)

NOTE: Parts A,B,C, and D are planed or resawn to ⅜" thick

storage Bench

▲ Pull-out baskets are a great alternative to drawers. They help keep things in order (so nothing gets lost in the back) and provide a clean look.

This handy bench is a great project to try your hand at loose-tenon joinery.

A storage bench is a great addition to an entry hall or mud room. This design features three storage bays — plenty of room to stow away some clutter. To organize the space, I used inexpensive baskets from a housewares store. (It's a good idea to have the baskets in hand first. This allows you to build the bench to suit the baskets for a good fit.)

Since I wanted to paint this project, I used poplar and MDF for the bench. The hardwood top adds a nice contrasting detail, and ensures plenty of seating support.

The construction is pretty straightforward as well. I relied on loose-tenon joinery for the frame. The advantage of using this type of joint is that you don't have to worry about fitting each individual tenon to a particular mortise. You just use a shop-made router jig to rout perfectly sized mortises, accurately positioned on every workpiece. And because the mortises are all the same size, you can make all the tenons you'll need in just a few minutes at the router table and table saw.

CONSTRUCTION DETAILS

OVERALL DIMENSIONS: 46½"W x 18¾"D x 30¾"H

NOTE: Refer to page 30 for an easy-to-build router jig for cutting the mortises

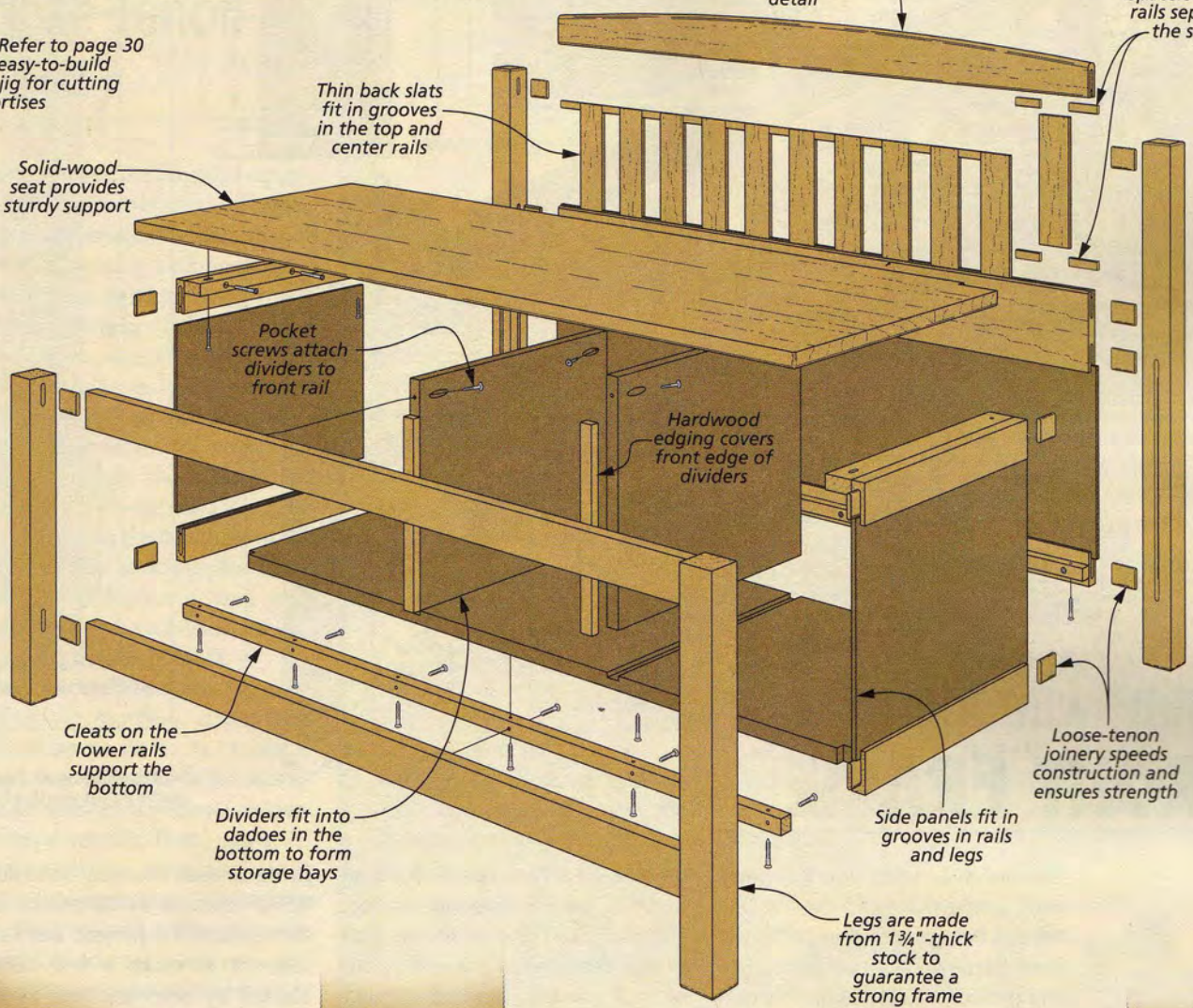

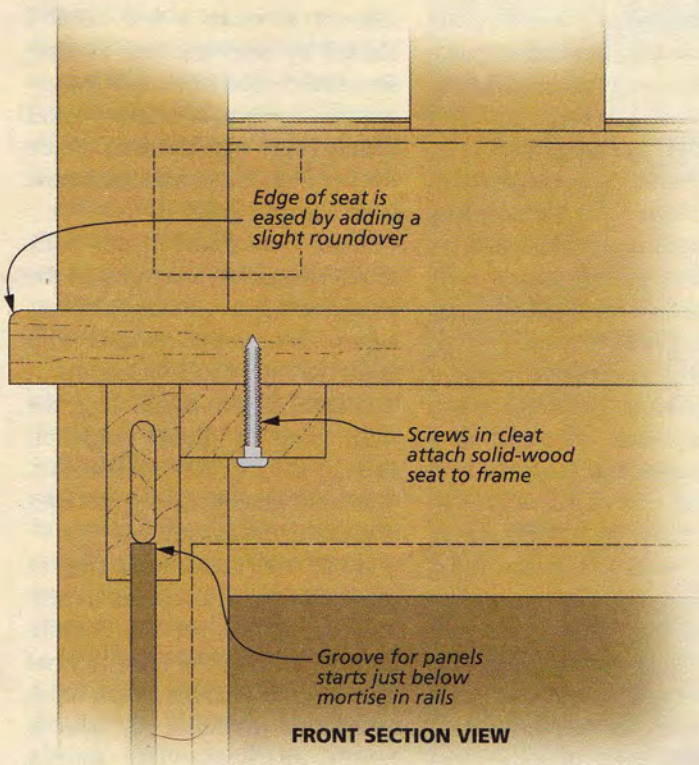

FRONT SECTION VIEW

Woodsmith

GO ON-LINE EXTRAS

If you need to change the dimensions of the bench to suit a different basket size, we've included a handy part-size calculator on our website at Woodsmith.com.

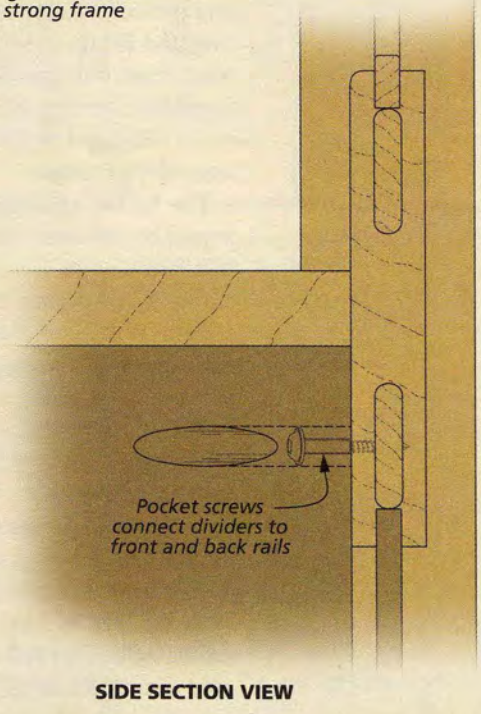

SIDE SECTION VIEW

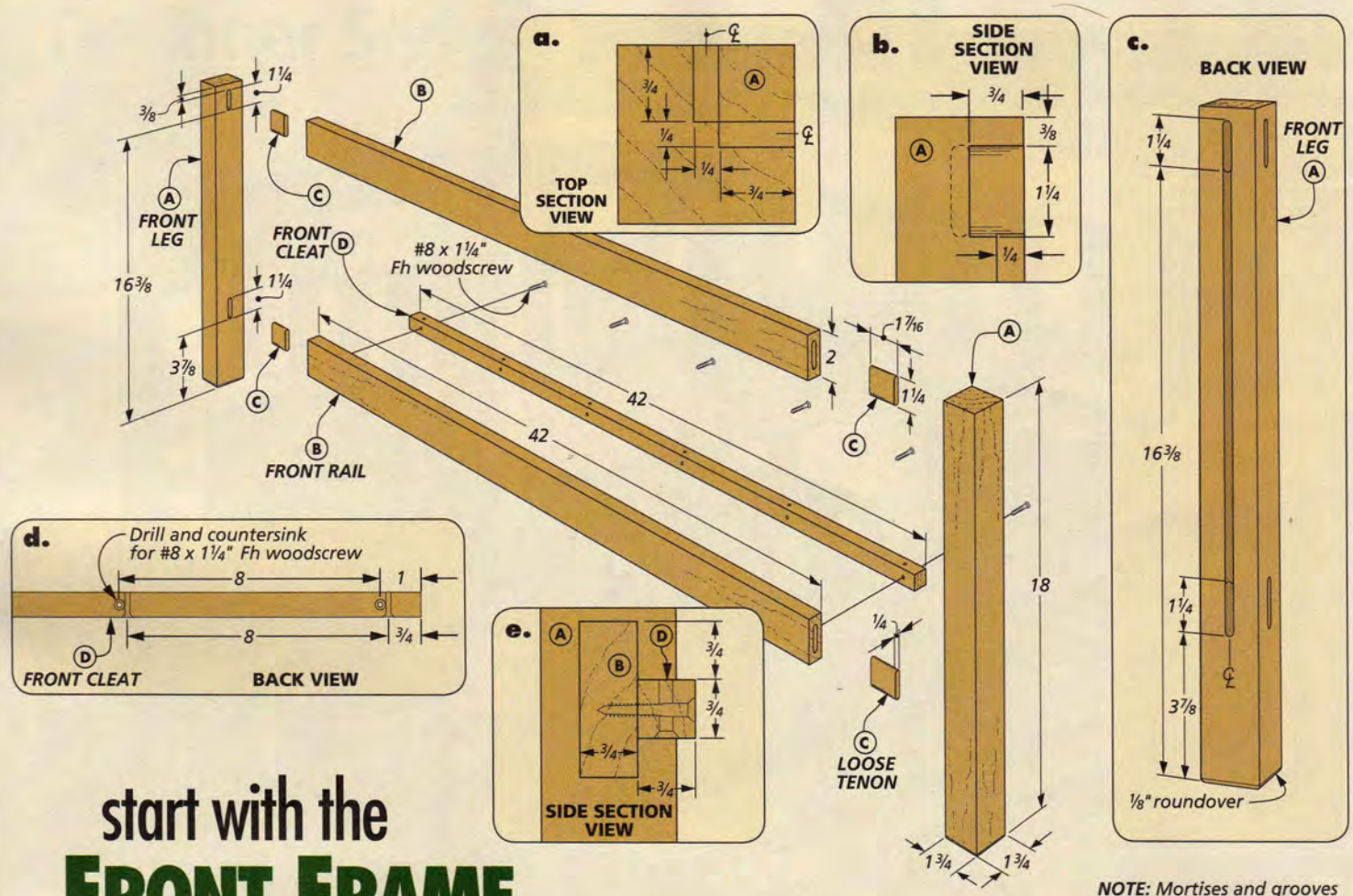

NOTE: Mortises and grooves centered on width of legs

start with the FRONT FRAME

The bench consists of a front and back frame that hold the storage bays in between. Starting with the front frame allows you to practice and perfect your technique for cutting and fitting loose tenons. This way, when you get to work on the more involved back frame, you'll be an old hand at the joinery and assembly processes.

The frame is simply two legs joined by two rails. As I said earlier, the loose tenons provide strong joints. I used the router jig shown on the opposite page to cut the mortises. It's simple to build, accurate, and very easy to use.

LEGS. To give the bench plenty of strength, I used 8/4 stock (1¾" thick) for the legs. If you can't find stock this size, you can always glue up thinner pieces. After planing the stock to its finished thickness, I cut the legs to final size. At the router table, I added a ⅛" roundover to the bottom of the legs.

RAILS. The rails are just ¾"-thick stock. You can start by cutting them to size. Next, mark the locations of the mortises on the legs and rails. You'll want to pay particular attention to the end points of each mortise. Since the router jig you'll be using will keep the cut centered, the start and stop locations are the key layout marks.

ROUT THE MORTISES. Now you're ready to cut the mortises for the loose tenons. The techniques illustrated on the opposite page give you an overview of each of the different types of cuts you'll need to make.

I started by routing the mortises in the legs. Note that the mortises on the back face are joined by a shallow groove that holds the side panels. You can rout this groove using the router jig, as well.

For the mortises in the rails, start by securing the workpieces in a vise or clamp them vertically to your bench before routing. You might also need to clamp supports to the sides to stabilize the router.

CUT THE TENON STOCK. With the mortises done, it's time to make the loose tenons. You only need about 30" of stock for the 20 tenons used throughout the project, but I usually try to make a few extra. I started by resawing and planing some hardwood stock to fit snugly in the mortise (¼"). It's a good idea to begin with the stock a little thicker than the mortise and then sneak up on a good fit.

After you've milled the stock to thickness, you can move to the router table and round over all four edges. Then, all that remains to do is cut the tenons to final length.

ASSEMBLY. Begin assembling the front frame by gluing tenons in each of the mortises on the rails. Then add glue in the leg mortises and clamp the assembly.

ADD THE CLEAT. I attached a cleat to the inside of the lower rail to provide a platform for the bottom. Start by cutting the cleat to final size, then drill countersunk holes as shown in detail 'd,' above. Finally, attach the cleat using a little glue and a few screws.

How-To: Loose-Tenon Joinery

The thought of drilling and squaring up the 40 mortises used in the bench may seem a little daunting at first. But by using a plunge router and a simple jig to guide it, you'll make short work of them all. (Shop Notebook on page 30 has the details for building the jig.)

The jig is just an auxiliary baseplate for your router with two adjustable fences. These fences trap the stock in between and keep the cut centered on the thickness of the workpiece. By attaching the fence with carriage bolts and wing nuts, the fences can be adjusted for different thicknesses of stock.

USING THE JIG. When you're ready to rout the mortises, first install a spiral upcut bit in the router. I found that this style of bit works well for these cuts because it clears the chips quickly. Then, using the layout marks on your workpiece, set the fence positions. Use a piece of scrap the same thickness as the workpiece to make test cuts and tweak the settings until the mortise is perfectly centered. (Once you have it set, you might want to rout all the workpieces of that thickness before moving the fences.)

After centering the bit, the next step is to set the depth of cut. With a plunge router, this is simply a matter of zeroing out the bit and adjusting the depth stop.

You'll need to clamp the workpiece in place, making sure the clamps won't interfere with the path of the router. For the legs, this isn't a problem. But when it comes to routing the ends of the rails, you'll need to hold them in a vise and clamp a couple of scraps to the workpiece to support the jig.

Finally, rout the mortises using a few light passes rather than one deep pass. This will result in a cleaner cut. The depth stop on your plunge router makes this easy.

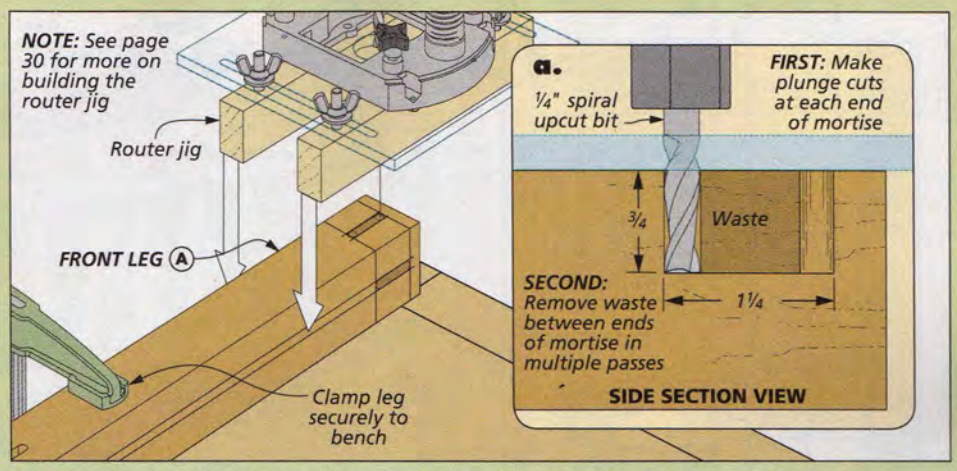

Routing the Leg Mortise. *After adjusting the fences on the router jig so the bit is centered on the width of the workpiece, plunge the bit to full depth at each end of the layout marks for the mortise. Then, using a few shallow passes, rout away the waste in between.*

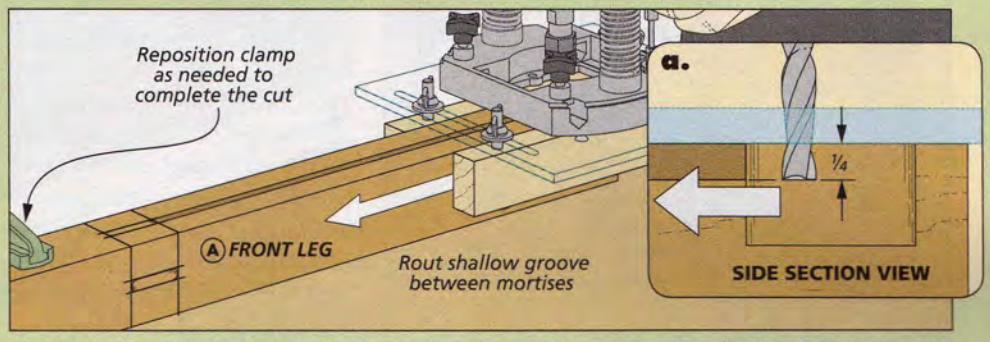

Routing the Groove. *With the leg mortises complete, reset the depth of the router bit and rout the shallow groove for the end panel. The fences keep this groove in line with the mortises, ensuring a perfectly aligned assembly.*

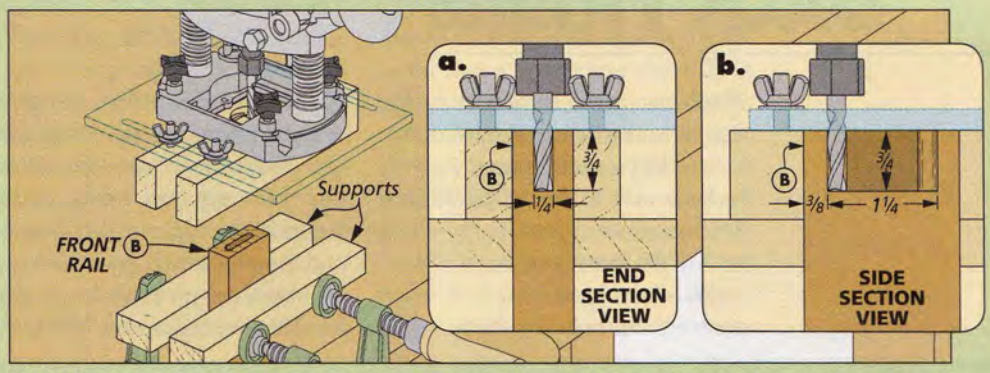

Rail Mortises. *Start by clamping the rail vertically in a vise or securing it to the bench with clamps. Then, clamp short pieces of hardwood to the rail for the fences of the router jig to ride on. Finally, rout the mortises using the same technique as you did for the legs.*

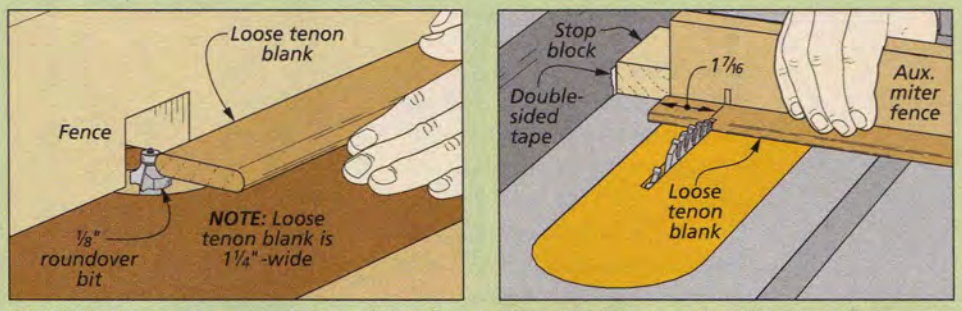

Making Loose Tenons. *After milling the stock to thickness and width, round over the four long edges at the router table. Then move to the table saw and cut the tenons to length using a stop block and an auxiliary fence on the miter gauge.*

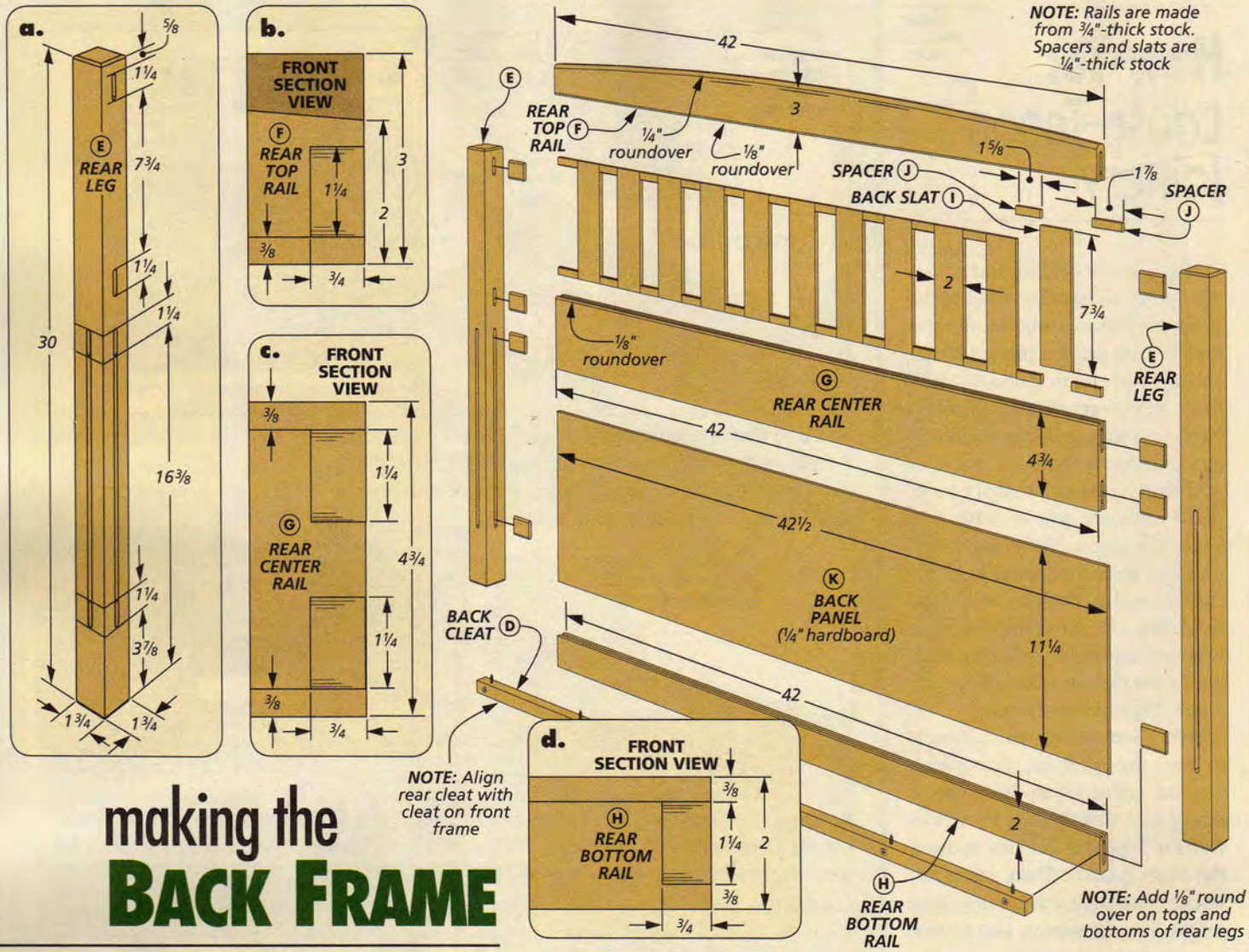

making the BACK FRAME

The back frame is similar to the front in construction. But it features a curved top rail and slats to provide back support. Below the slatted back rest, a hardboard panel encloses the back of the storage bays.

LEGS. Once again, you'll need to start with the legs. This time, you'll also need mortises to accommodate a wide center rail. As you can see in the main drawing above, this rail requires two mortises. Begin by laying out the locations and then rout each one.

Now you can rout the grooves for the side panels. Note that there's also a groove on the inside face of each leg that will hold the hardboard back panel.

RAILS. The rails for the back frame not only provide structural support, but they also hold both the lower back panel and the slatted back rest. You can start by cutting

How-To: Make Spacers & Open Grooves

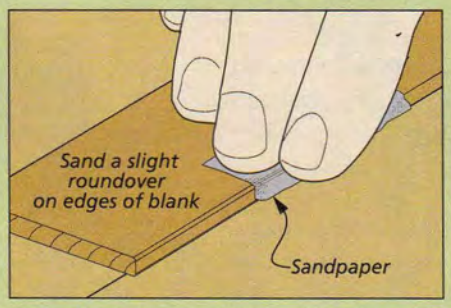

Ease the Corners. *Start with extra-wide stock for the spacers and round over the corners with 220-grit sandpaper.*

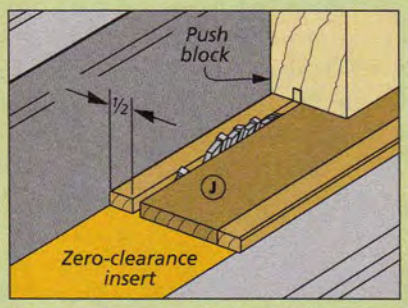

Rip the Spacers. *At the table saw, rip the spacer stock to final width. Use a push block to make the cut safely.*

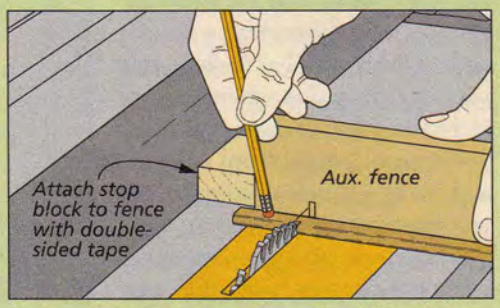

Cut to Length. *With an auxiliary fence on the miter gauge and a stop block attached to the rip fence, trim the spacers to final length.*

the three rails to size. Then it's back to the bench to rout the mortises on the ends. Use the same technique for these cuts as you did earlier on the front rails.

At this point, you're ready to cut the grooves in all three rails. The grooves in the top rail and on the center rail hold the back slats and spacers. The bottom rail and the groove on the lower edge of the center rail hold the hardboard back panel. The box below shows how I made these cuts at the table saw.

TOP RAIL. With the mortises and grooves complete, you can turn your attention to laying out and cutting the arch on the top rail. The centerpoint of the arch is 1" higher than the ends. The easiest way to lay out the arch is to bend a flexible strip of wood to match the profile of the curve while you trace it onto the workpiece.

Next, you can move to the band saw and cut the arch. After sanding the curve smooth, step over to the router table to add the roundovers on the top and bottom edges.

LOWER PANEL. The next step is to cut the hardboard back panel to size. It's worth taking a few minutes at this point to dry fit the panel in the rails and legs. This way, you'll be assured of a good fit before moving on to the assembly.

BACK SLATS AND SPACERS. A series of thin back slats separated by short spacers forms the back rest for the bench. For both the slats and the spacers you'll need to start by milling some ¼"-thick stock.

Shop Tip: Assemble Back Rest

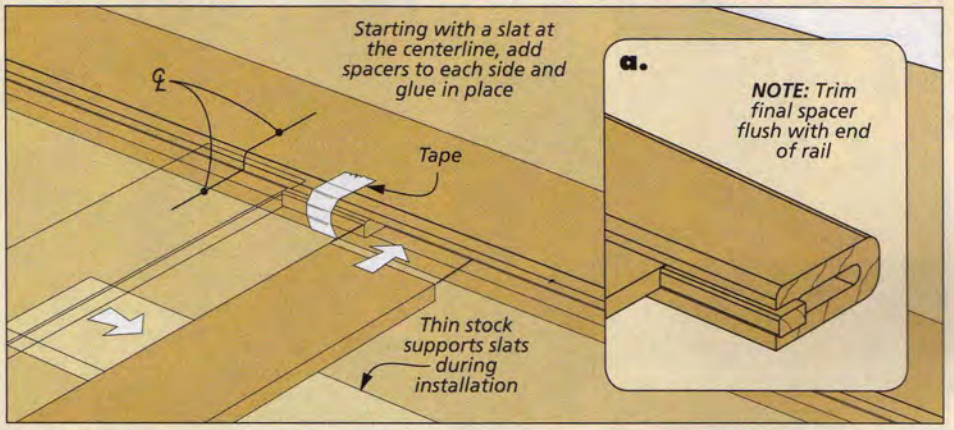

After preparing the thin stock, you can cut the slats to final size. Then, cut a wide blank for the spacers. Ease the edges with sandpaper and rip the spacers to final width, as shown in the box on the opposite page. Finally, cut the spacers to finished width. When cutting the spacers to length, note that the end spacers are longer than the others. It's a good idea to wait and cut these after dry fitting the others in the assembly. This way you can cut them for a perfect fit.

ASSEMBLY. I started the assembly by marking the centerline on the length of the top and center rails. Using this centerpoint, I centered a slat in the groove on the top rail and glued a spacer on each side and secured it with tape. The tape acts as a clamp to keep the spacers in position. Now it's just a matter of using the slat to position and install the remaining spacers with glue and tape. When you've finished adding spacers to the top rail, clamp it to the center rails as shown in the lower illustration above. This way, you can use it as a template for adding spacers to the center rail. Using a square makes this method almost foolproof and guarantees the spacers in the two rails will match when you install the slats.

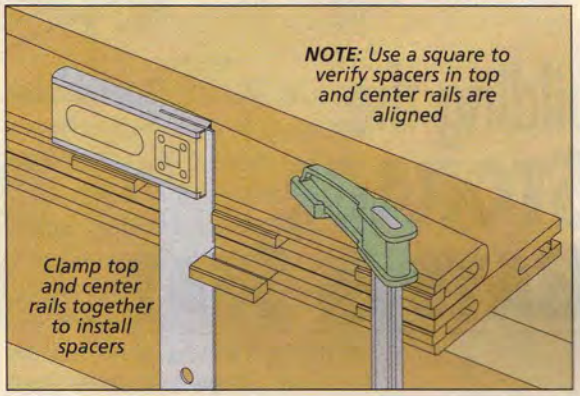

From here, the entire back frame comes together at once. After the glue on the spacers has dried, you can add the slats between them with a little glue in both the top and center rails. Keep your square handy and check the slats as you clamp the assembly.

Now simply glue the tenons in all three rails and add the back panel in the grooves in the lower and center rails. To complete the assembly, just add glue to the mortises in the legs and clamp it all together.

The last step in completing the back frame is to add the cleat on the lower rail. Just like the cleat on the front frame, drill countersunk holes and attach it with glue and screws.

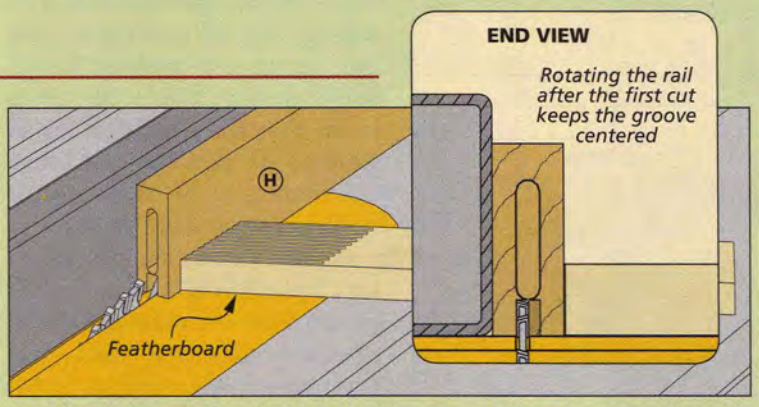

Cutting Grooves for the Panels. *You can cut the grooves at the table saw using a regular blade. Start the first cut a little off-center, as shown in the inset, then rotate the rail end-for-end and repeat.*

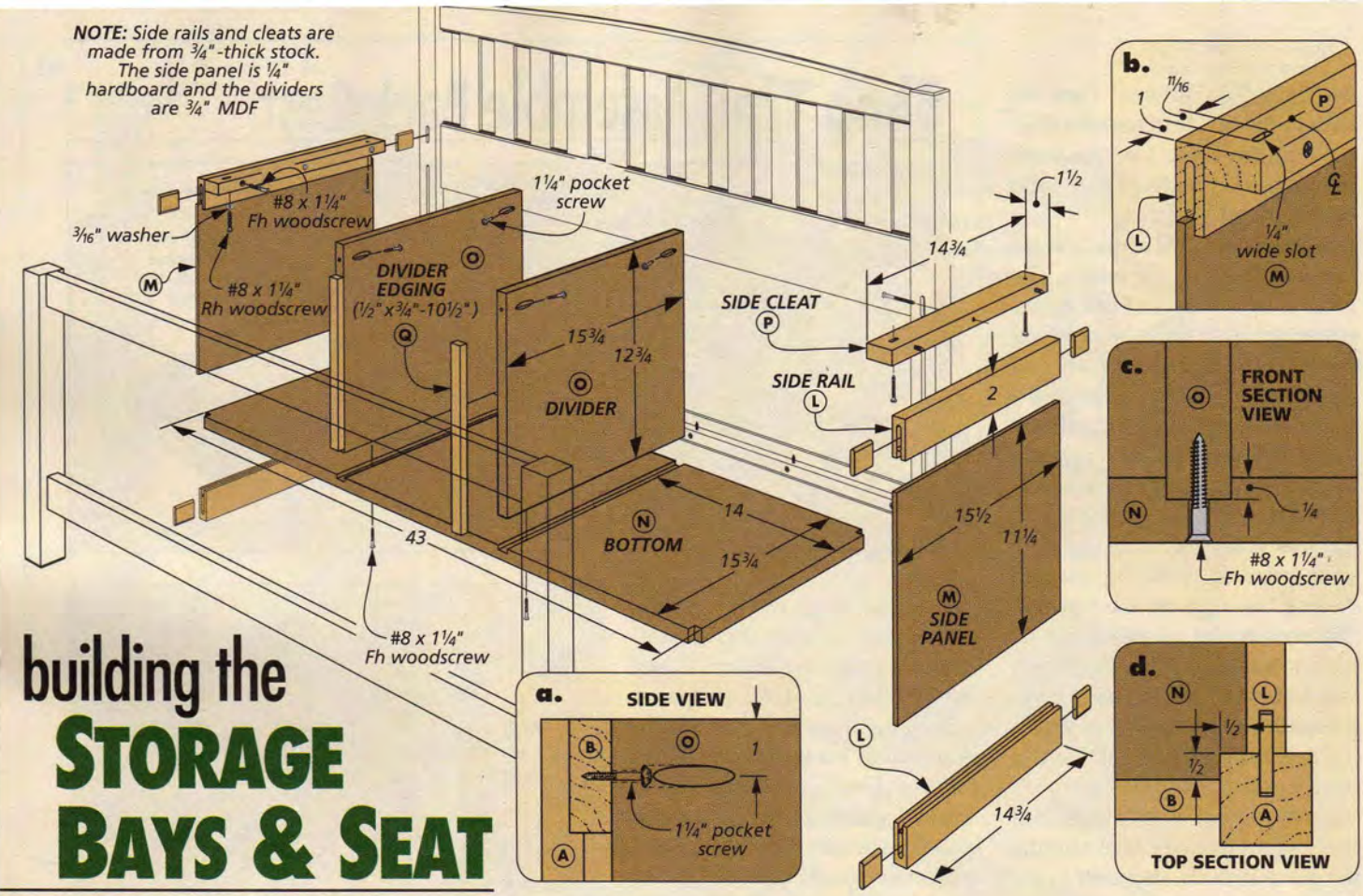

building the STORAGE BAYS & SEAT

The three storage bays are formed by making a simple box with two dividers fit into dadoes in the bottom. The dividers are attached to the front and back rails using pocket hole joinery or the alternate method shown in the box below. Side frames join the front and back frames and also connect the bottom and the hardwood top. I started by making the side frame assemblies.

SIDE FRAMES. The side frames consist of rails that hold a hardboard panel. The rails are attached to the front and back frames with loose tenons. After cutting the rails to size, you can rout the mortises and the grooves that will hold the panel. I cut the hardboard panels to size and glued them into the grooves.

To attach the hardwood seat, I also added cleats to the upper rails. After cutting the cleats to final size, just drill holes for the screws. Note the front end is slotted to allow for seasonal wood movement (detail 'b'). Then fasten the cleats to the inside edge of the rails.

BOTTOM. With the side frames complete, you can turn your attention to the bottom. It's just an MDF panel with dadoes to hold the dividers. It's also notched on the ends to fit around the legs. You can start by cutting the bottom to final size. You'll then need to install a dado blade in the table saw and cut the shallow dadoes to match the thickness of the dividers. To complete the bottom, drill holes in the dadoes so you can attach the dividers with screws later.

DIVIDERS. The dividers not only form the storage bays, but they support the top as well. As you can see in the drawing above, you'll need to drill pocket holes on the front and back edges to join them to the rails. You can install the dividers in the dadoes in the bottom with glue and screws.

ASSEMBLY. Assembling the bench isn't too difficult because you've already built a few sub-assemblies (the front and back frames, the side frames, the bottom and dividers). Now you can start putting it all together by gluing tenons in the side frames. Then, glue them into

Shop-Tip: Optional Joinery

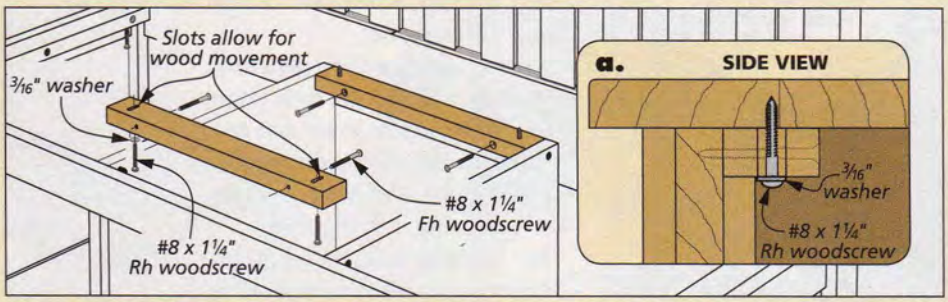

No Pocket Hole Jig? *You can attach the dividers to the front and back rails using two cleats. Simply cut the cleats to fit between the dividers and drill countersunk holes, as shown to attach to the rails and top. Fasten the cleats to the dividers with screws.*

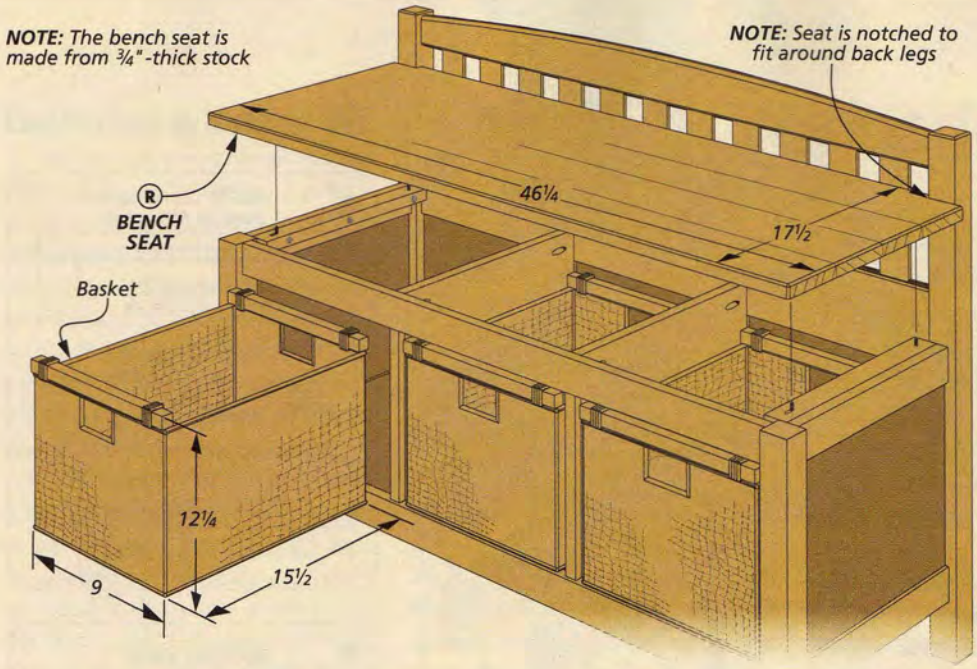

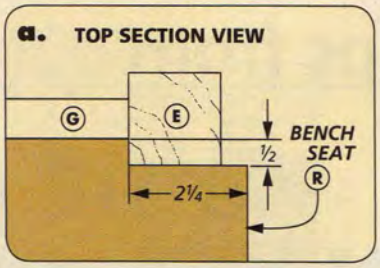

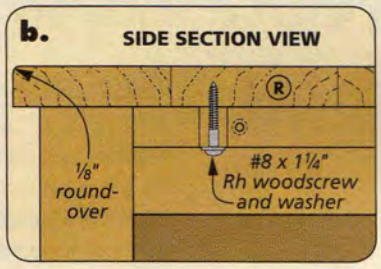

the front and back frames. Place clamps at each tenon location and make sure the assembly is square.

When the glue dries, the next step is to drop the bottom in place on the cleats and secure it with screws. Now simply fasten the dividers to the front and back rails with screws in the pocket holes you drilled earlier. To complete the assembly, glue thin strips of edging on the front edge of both dividers.

THE HARDWOOD SEAT. The last component you need to make for the bench is the hardwood seat. It provides a nice decorative contrast to the bench. I chose oak because of its strength (as the seat of the bench) and its great looks.

You'll probably need to glue up a few pieces to get the final width of the seat. After jointing the individual pieces, take care to keep them aligned during the glueup. I find it helpful to add clamps and cauls on the ends to keep the pieces aligned and minimize any planing and sanding later. When the glue has dried, cut the seat to final size and set it aside until you've finished painting the bench frame.

PAINT FIRST. At this point, it's a good idea to paint the bench. This way, you'll have easier access to all the nooks and crannies. After a applying a couple coats, you can attach the seat using screws through the cleats on the side frames.

Now you can place the baskets in the bays and put the bench to use. It's sure to provide many years of convenient storage. W

Materials, Supplies & Cutting Diagram

A	Front Legs (2)	1¾ x 1¾ - 18
B	Front Rails (2)	¾ x 2 - 42
C	Loose Tenons (20)	¼ x 1¼ - 36 rgh.
D	Front/Back Cleats (2)	¾ x ¾- 42
E	Rear Legs (2)	1¾ x 1¾ - 30
F	Rear Top Rail (1)	¾ x 3 - 42
G	Rear Center Rail (1)	¾ x 4¾ - 42
H	Rear Bottom Rail (1)	¾ x 2 - 42
I	Back Slats (11)	¼ x 2 - 7¾
J	Spacers (24)	¼ x ½ x 48 rgh.
K	Back Panel (1)	¼ Hdbd - 11¼ x 42¾
L	Side Rails (4)	¾ x 2 - 14¾
M	Side Panels (2)	¼ Hdbd - 11¼ x 15½
N	Bottom (1)	¾ MDF - 15¾ x 43
O	Dividers (2)	¾ MDF - 12¾ x 15¾
P	Side Cleats (2)	¾ x 1½ - 14¾
Q	Divider Edging (2)	½ x ¾ - 10½
R	Bench Seat (1)	¾ x 17½ - 46½

- (44) #8 x 1¼" Fh Woodscrews
- (4) 1¼" Pocket Screws
- (2) #8 x 1¼" Rh Woodscrews
- (2) 3/16" Flat Washers

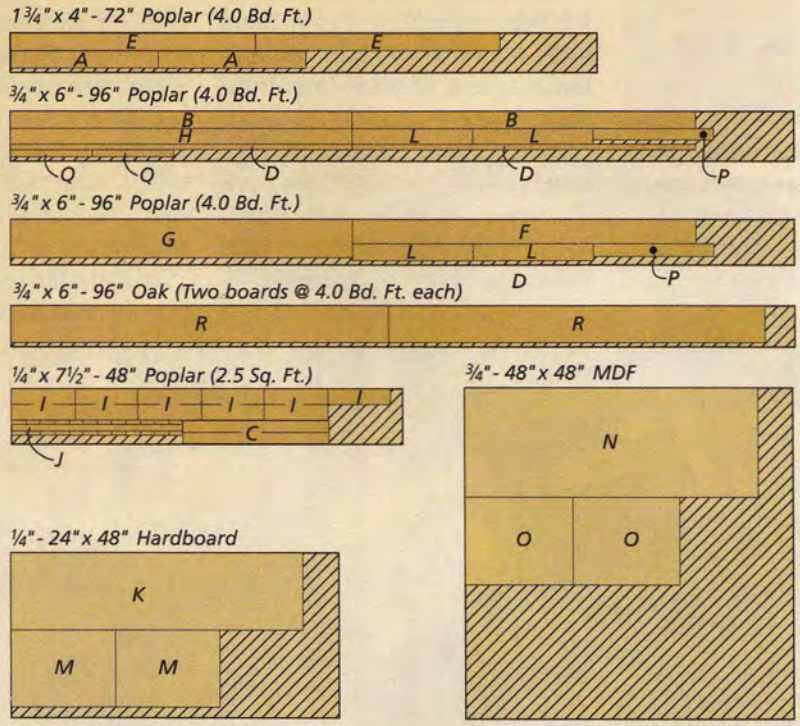

SHOP NOTEBOOK

Mortise Jig

To create the mortises for the loose tenons used on the bench on page 22, I turned to my plunge router and a simple shop-made jig, like the one shown at right.

The jig starts with an auxiliary base made out of a piece of clear acrylic (*Plexiglas*). Two adjustable hardwood fences are attached to the base with carriage bolts, washers, and wing nuts. A pair of slots in the base allows the fences to be adjusted to match the thickness of your workpiece.

To use the jig, first attach it to your router. Then place it over your workpiece and adjust the fences to fit against the sides of the workpiece. The router bit should be centered on the thickness of the stock. The fences guide the router to create a perfectly straight mortise.

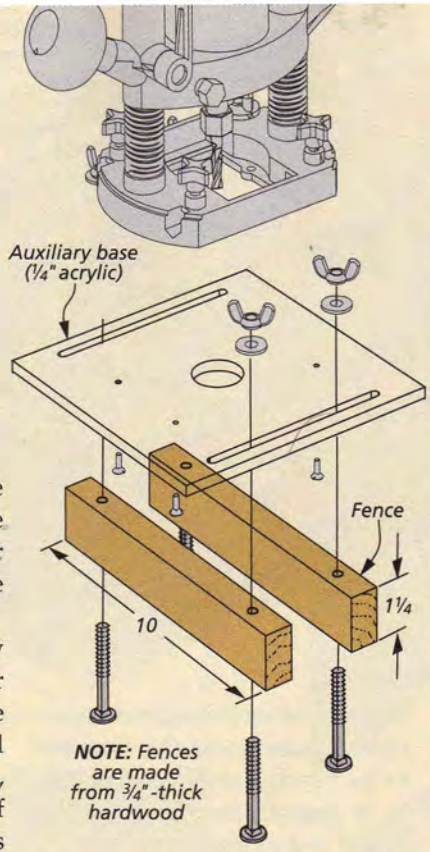

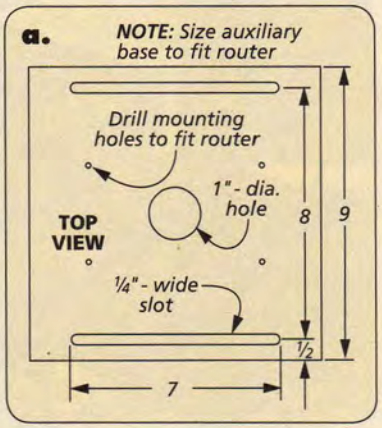

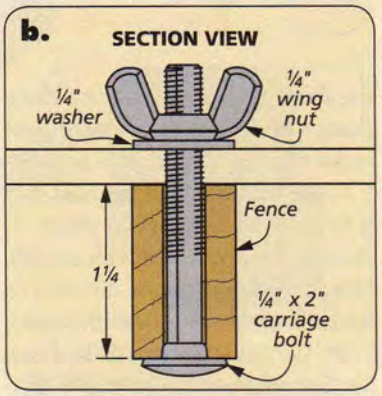

Decorative Splined Miters

▲ The miter joints are reinforced with contrasting decorative splines.

Both the frame and the drawers of the in-box on page 38 feature splined miters. To cut the kerfs for the splines, I made a jig to cradle the workpiece. As you can see in the drawing at right, it's nothing more than a block glued up from three layers of MDF (medium-density fiberboard).

After gluing up the block, I tilted my saw blade 45° and cut a V-notch in the center of the block, as in Figure 1. (Double-sided tape holds the waste in place.) This notch will hold the workpiece at the proper angle while you cut the kerfs at the table saw.

KERFS. To cut the kerfs, raise your saw blade to the proper height. (You want the kerfs to be ⅜" deep.) Then position your rip fence so it's ¼" away from the blade.

Now with the workpiece resting in the V-notch, push the jig and the workpiece through the blade (Figure 2). After cutting the first kerf, rotate the workpiece 180° to cut the second kerf, as in Figure 2a.

To make the second set of kerfs, simply reposition your rip fence and repeat the process, just like you see in Figure 2b. Again, you'll need to flip the workpiece around to make the second cut.

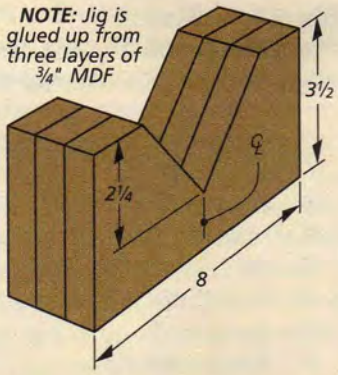

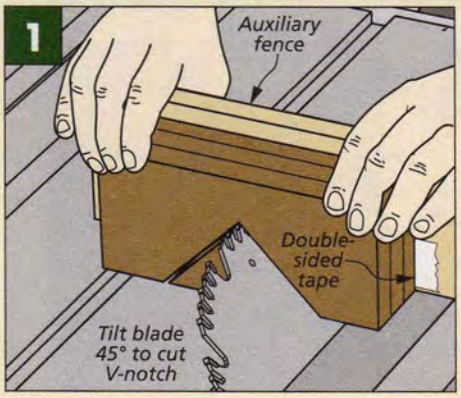

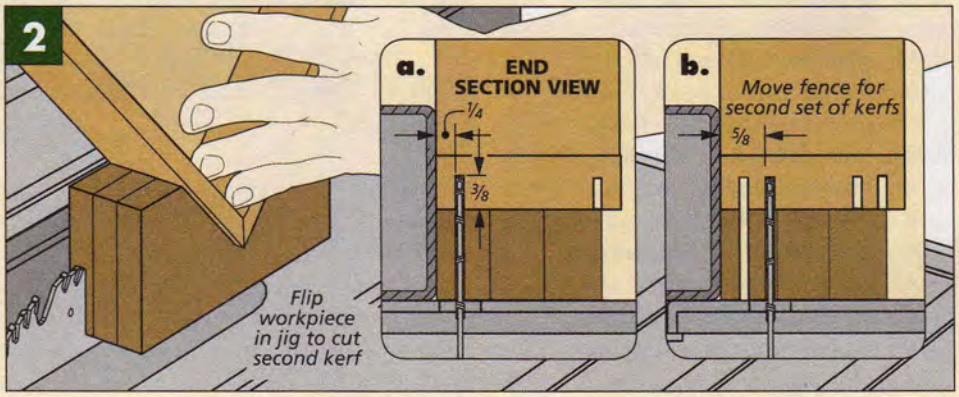

Centering a Router Bit

To cut the stopped grooves on the sides of the in-box trays, I used a straight bit in the router table. For these trays to sit level and slide smoothly, it's important that the grooves are positioned identically on both sides of the tray. This means positioning the router table fence so the bit is perfectly centered on the width of the tray sides.

TEST PIECE. To do this, I simply used a test piece cut to the same width as my drawers. After using a rule to position my fence as accurately as possible, I made a short cut in the end of the test piece (drawing above). Then I just flipped the test piece around to check my setup on the other side of the bit. The notch should line up with the bit. If it doesn't, trim off the end of the test piece, readjust the fence, and try again until the bit is centered.

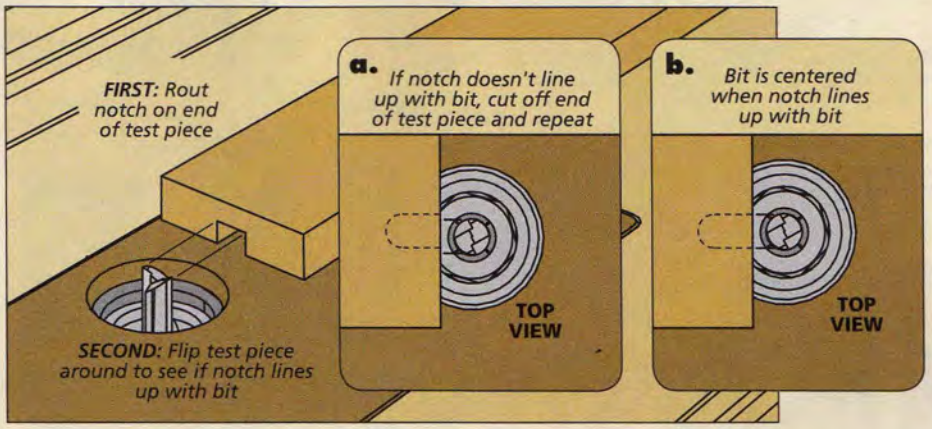

Note: I used the same method for centering the router bit when routing the stopped grooves in the handle for the silverware tray on page 16 (see below).

Round Handle from Square Stock

Making the round handle for the silverware tray on page 16 created some interesting challenges. The ¾"-dia. handle is shaped out of a piece of square stock. And it has a centered, stopped groove at each end to fit over the divider, as shown in the drawing at right.

To make the handle, I started with an extra-long, square blank. After marking the center of the blank, you can lay out the ends of the stopped grooves according to the size of the circular cutout on the tray divider.

I routed the grooves on the router table using a straight bit, as shown in Figure 1. You'll have to square up the ends of the grooves with a chisel.

ROUNDOVERS. To create the profile of the handle, I simply rounded over all four edges of the center portion of the blank. The trick to doing this is to leave the last few inches at each end of the blank square so that the workpiece will register flat against the router table and fence.

To do this, you'll have to pivot the blank into the bit and stop the cut before you reach the end.

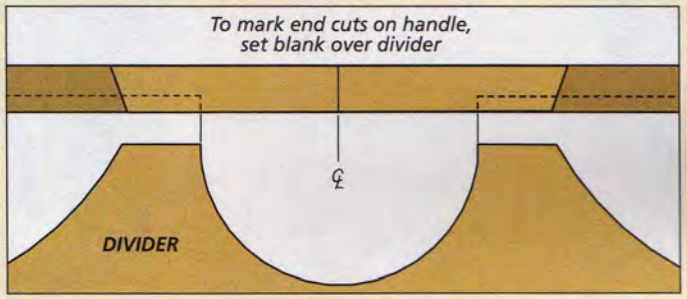

Pencil lines drawn on the fence serve as starting and stopping points (Figure 2).

After rounding over the edges, the final step is to miter the ends of the handle to length at the table saw (Figures 3 and 4).

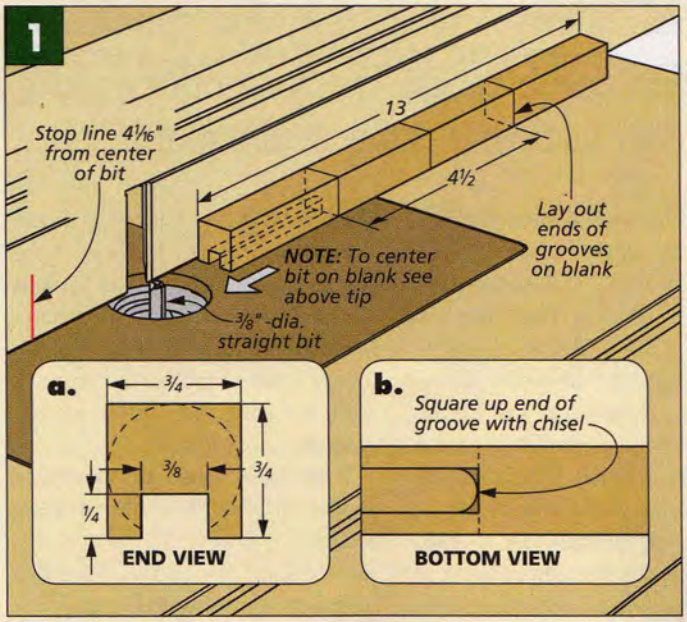

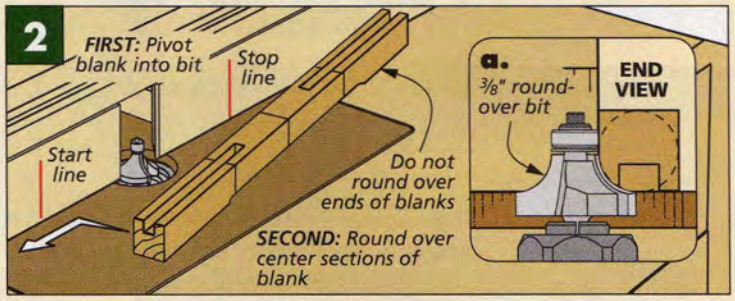

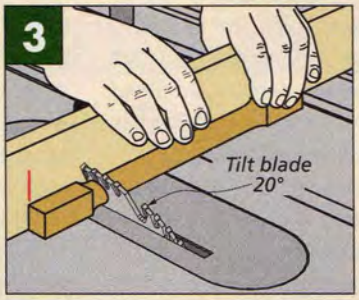

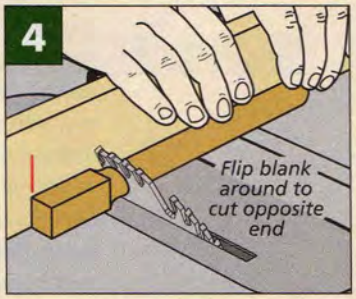

craftsman-style Wall Cabinet

This project provides the perfect combination. The straightforward design and small size make it easy to build — the details give it style.

This Craftsman-style wall cabinet creates a nice illusion. Despite its small size, it looks very impressive, both from a visual and a woodworking standpoint. But in reality, the design is very straightforward and all the woodworking involved is down-to-earth. The trick here is in the details of construction.

You start with a bare-bones, easy-to-assemble case. It's just two sides, three shelves, and a simplified frame-and-panel back. A few perfect Craftsman accents serve to dress up the appearance.

The nice thing is that this first stage goes quickly. Then you get to the real meat of the project — building the divided-light doors. With the addition of the doors, an ordinary wall shelf becomes a handsome cabinet. This is Craftsman woodworking at its finest.

Although simple in detail, the doors give the impression of some sophisticated woodworking. And as with the assembly of the case, building the doors is "non-threatening." The job is broken down into two, easy-to-manage sections and it's all very relaxed. There's no complicated joinery and no frenzied "all-at-once" assembly is required.

It all adds up to a project that will be enjoyable to build, pleasing to the eye, and very practical. It's just the kind of woodworking that keeps us returning to the shop.

CONSTRUCTION DETAILS

OVERALL DIMENSIONS: 30"W x 9⅛"D x 30"H

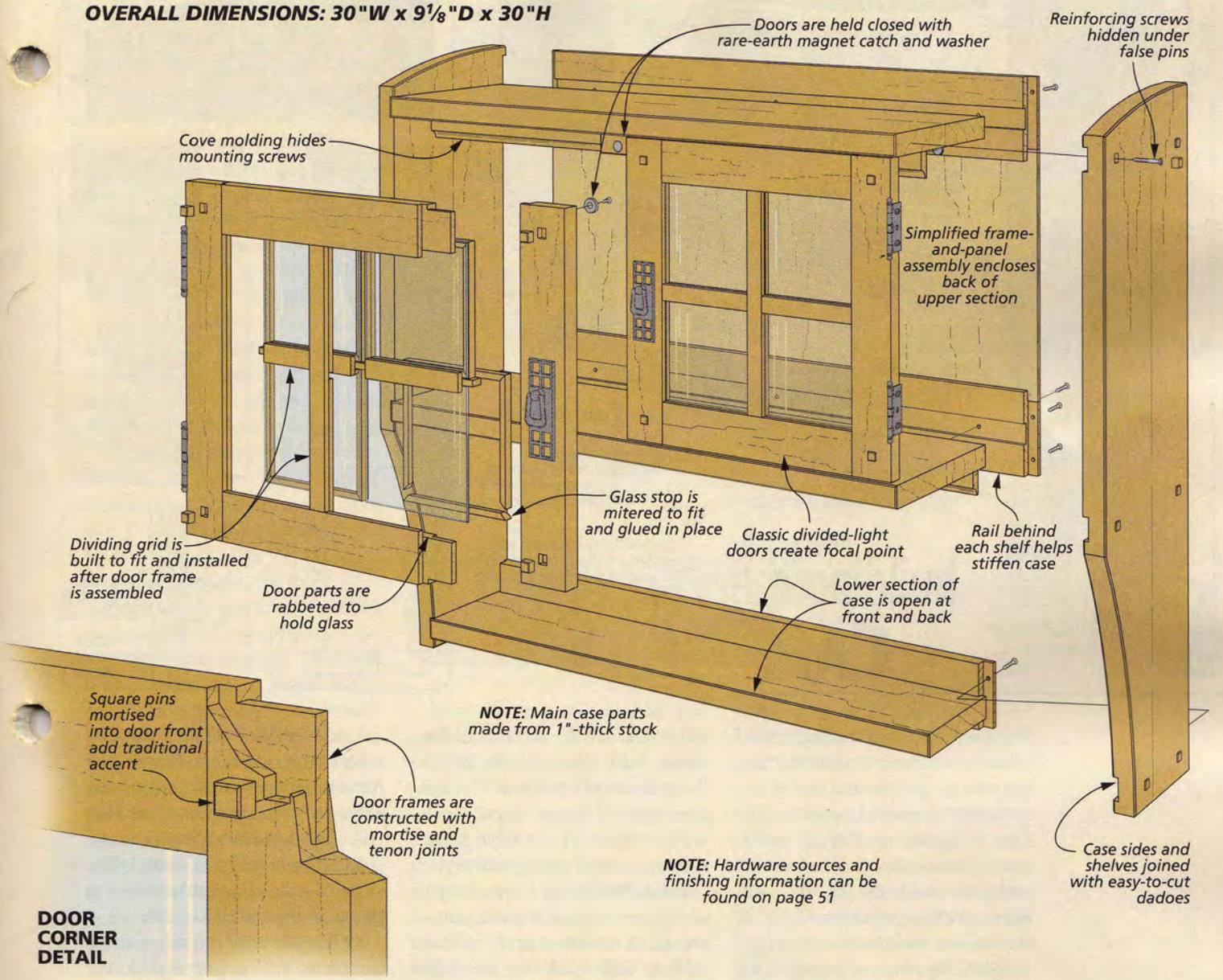

Materials, Supplies & Cutting Diagram

A	Case Sides (2)	1 x 9 - 30
B	Top/Middle Shelves (2)	1 x 8⅝ - 28½
C	Bottom Shelf (1)	1 x 5 11/16 - 28½
D	False Pins (20)	⅜ x ⅜ - 5/16
E	Back Top/Middle Rails (2)	¾ x 4 - 29
F	Back Bottom Rail (1)	¾ x 3 - 29
G	Back Panel (1)	¼ ply. - 29 x 12
H	Mounting Molding (2)	½ - 1¼ x 28
I	Door Stiles (4)	¾ x 2 - 14
J	Door Rails (4)	¾ x 2 - 12¾
K	Door Bars (4)	¾ x ¾ - 11
L	Glass Stop (1)	⅜ x ¼ - 192 rgh.
M	Door Stop (1)	½ x 1 - 4

- (2 pr.) Ball-Tip Butt Hinges w/ Screws
- (2) Door Pulls
- (6) ½"-dia. Rare-Earth Magnets
- (2) ½"-dia. Magnet Washers
- (17) #6 x 1¼" Fh Woodscrews
- (12) #8 x 2" Fh Woodscrews
- (12) ½" Brads
- (8) 5 1/16" x 5 1/16" Glass Panels (3/32" thick)

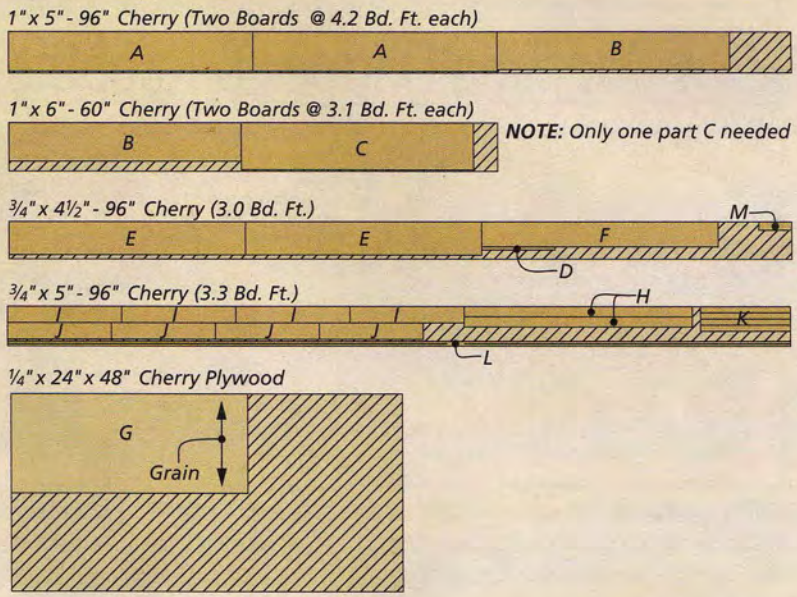

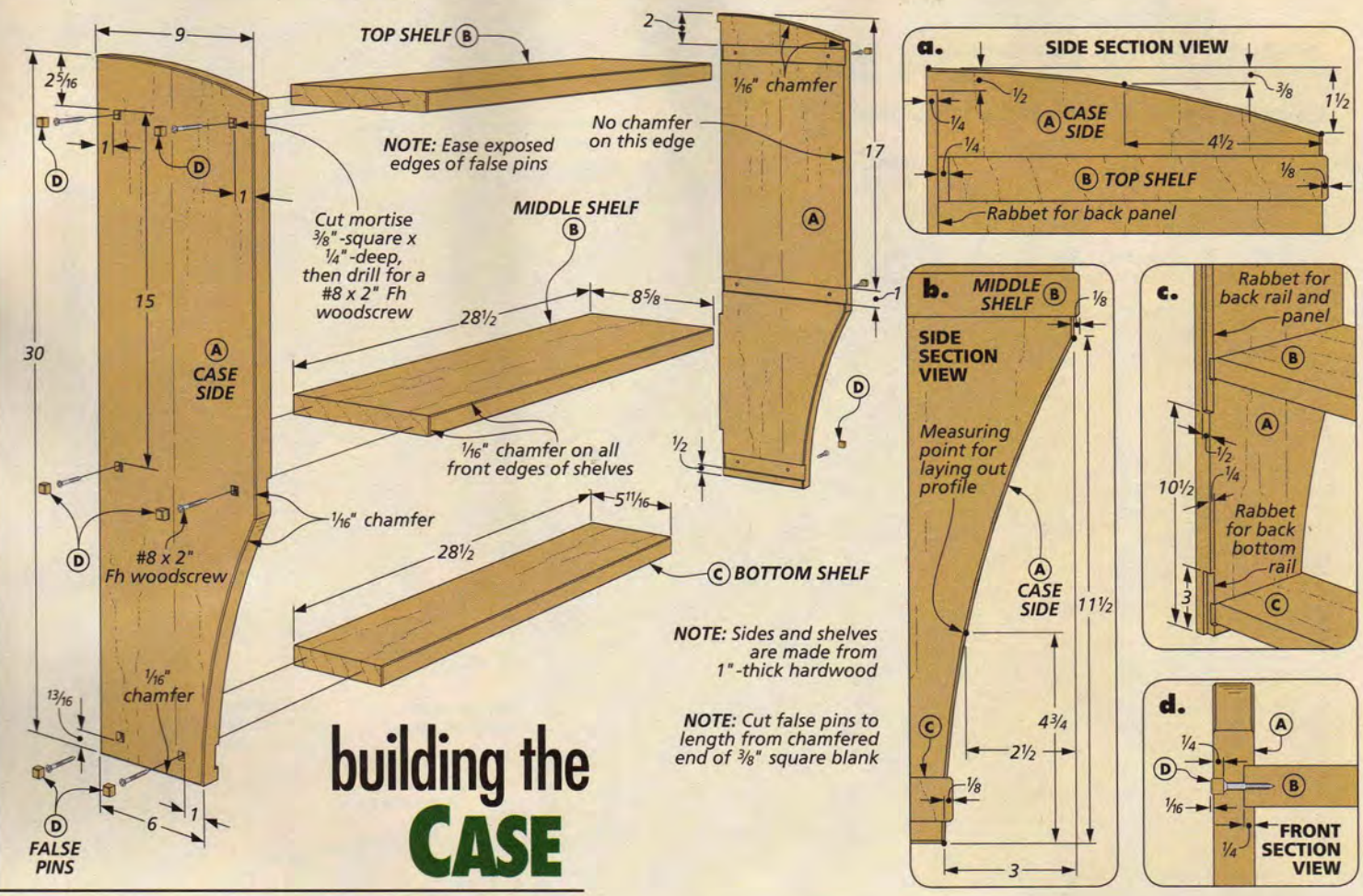

building the CASE

The small size and straightforward joinery combine to make building the case go quickly and easily.

THE SIDES. I started work on the case by gluing up 1"-thick panels for the case sides. (I glued up the wide panels for the top and middle shelf at the same time.) Then I cut the two sides to overall size.

DADOES. The shelves are captured in dadoes cut into the sides and reinforced with screws hidden under false pins (detail 'd'). So these dadoes come next. The two-pass method I used to cut the 1"-wide dadoes on the table saw is shown in the drawing below.

BACK RABBETS. Next, I routed a pair of stopped rabbets in each side, as shown in details 'a' and 'c.' These rabbets will hold the simplified frame and panel back.

You can do this easily at the router table, as shown below. Just remember that you want the two sides to be mirror images. This will affect how the rabbets are laid out and how they are routed. The stopped ends of the rabbets have to be squared up with a chisel.

THE PROFILES. With the side joinery complete, the upper and lower profiles on the sides can be created.

How-To: Side Dadoes & Rabbets

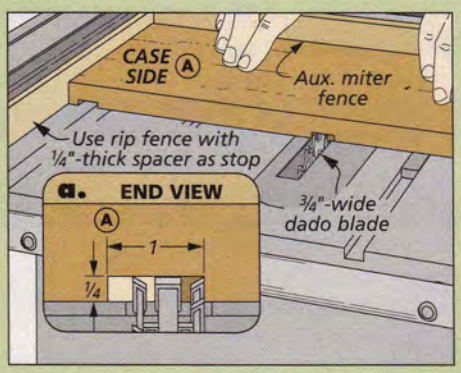

Wide Dadoes. *The 1"-wide dadoes are cut in two passes. I placed a spacer against the rip fence to make the first pass.*

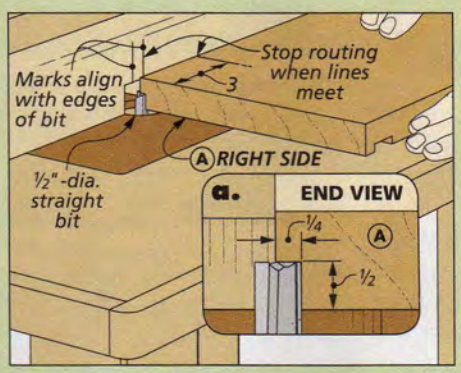

Lower Rabbet. *The lower rabbet on the left side is started from the end. The opposite rabbet will require a plunge cut.*

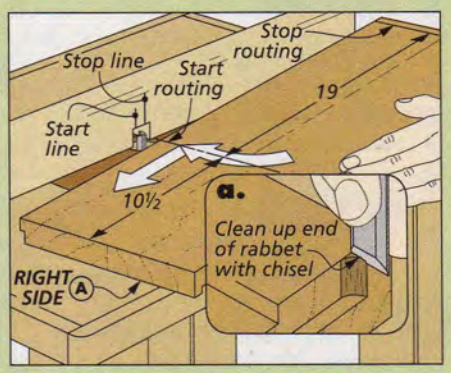

Upper Rabbet. *Start the upper rabbet by aligning the side with a mark on the fence and then plunging into the bit.*

Details 'a' and 'b' on the opposite page show the key measurements for the curves. I simply used a flexible strip of wood to draw them. A quick trip to the band saw and some time spent sanding will leave you with smooth contours.

MORTISES. Now you can lay out and cut the 3/8" square mortises for the pins, as shown in the drawings on the opposite page. I simply drilled a shallow hole then squared it up with a chisel.

Finally, I routed a 1/16" chamfer on the top, bottom, and front edges. The exception is the inside edge between the top and middle shelf where the door is hinged.

THE SHELVES. Making the shelves is a breeze. They are simply glued up and then cut to size. Just note that the shelves are recessed 1/2" from the back edge of the sides and sit 1/8" proud at the front.

After chamfering the front edges of the shelves, assemble the case with glue and screws. Then cut the false pins from a length of 3/8"-square stock to plug the mortises.

THE BACK. Now you're ready to add the back. This consists of a rail behind each shelf and a 1/4" plywood panel that encloses the upper section of the case.

The drawings below show how to make the series of cuts needed to fit the rails to the case. First, you'll cut a tongue on the ends of the rails. This tongue will lay in the rabbets in the case sides (detail 'a' above).

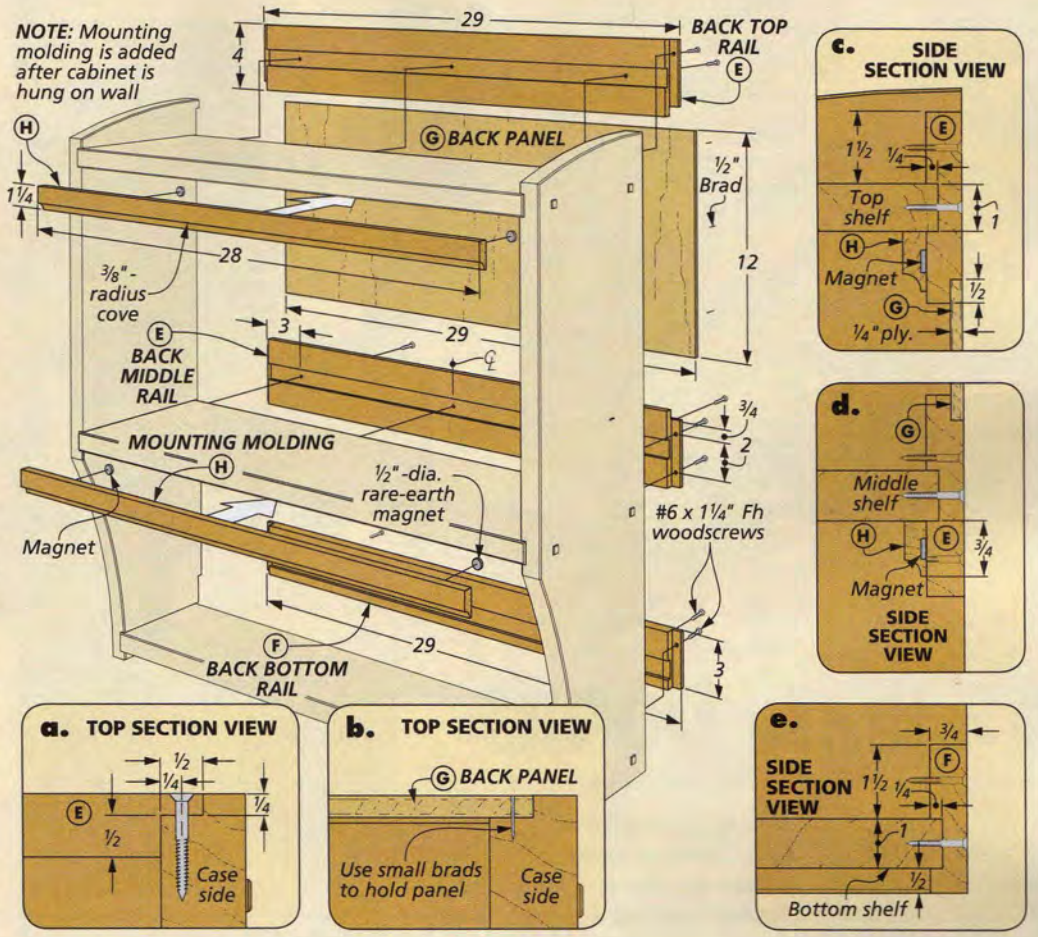

Next, the top and middle rail need a rabbet along one back edge to hold the plywood back panel (details 'c' and 'd'). The last step is a groove in the front face of each rail that allows it to fit snugly over the shelves (details 'c', 'd' and 'e').

IN PLACE. With all this work done, you can start adding the pieces to the case one at a time. The rails are glued and screwed to the shelves and the sides. Then the plywood panel is cut to fit and then glued and tacked to the rails and sides.

MOLDING. The last task is to make and fit two pieces of cove molding that will cover the screws used to mount the cabinet (details 'c' and 'd'). Once the cabinet is on the wall, you can locate and inset rare-earth magnets on the back of the molding over the heads of the screws. The molding will simply stick to the heads of the screws.

Back Rail Joinery

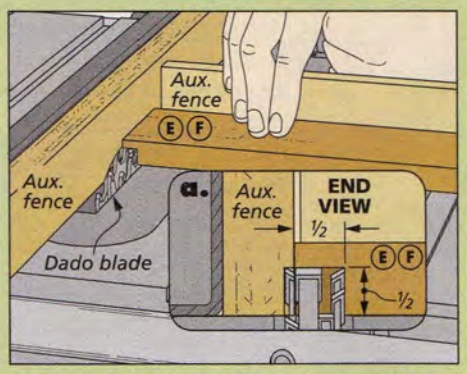

A Tongue. *I used a dado blade buried in an auxiliary rip fence to rabbet the ends of the rails. The deep rabbet creates a tongue.*

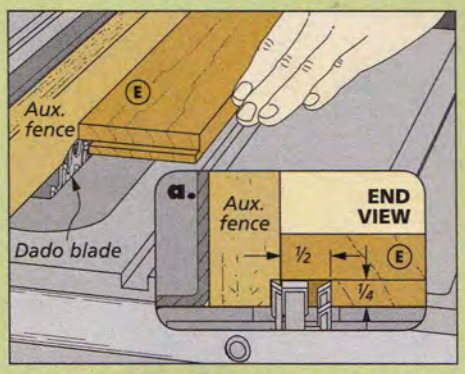

Panel Rabbet. *The same general setup can be used to cut the panel rabbet in one back edge of the top and middle rails.*

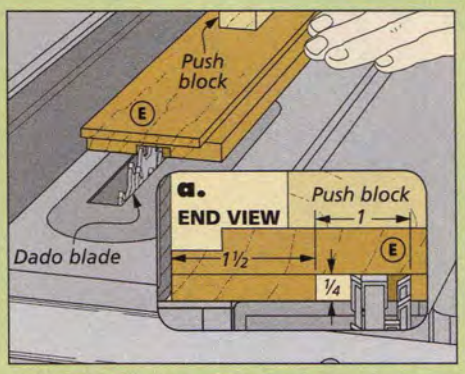

A Wide Groove. *The final step is to cut a wide groove into each rail aligned to fit snugly around the shelves.*

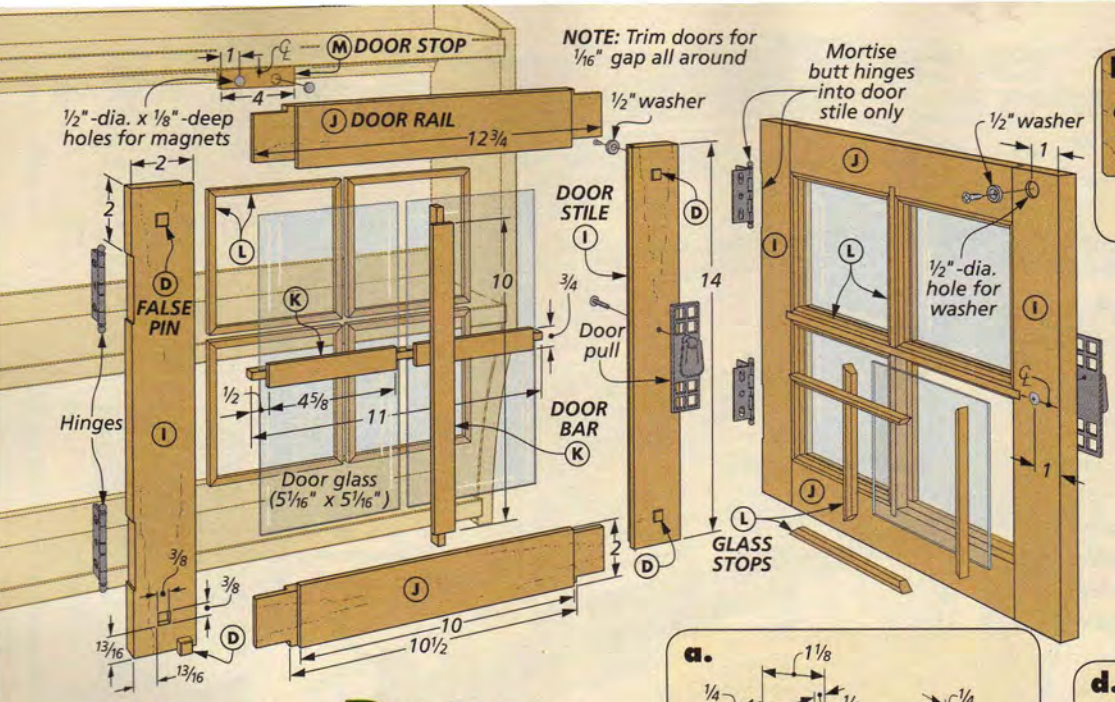

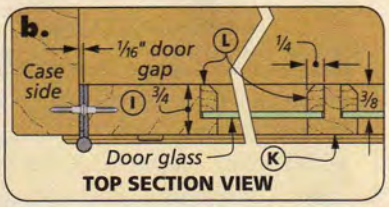

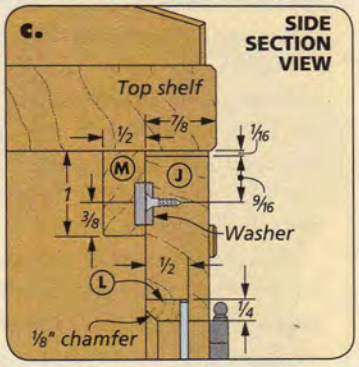

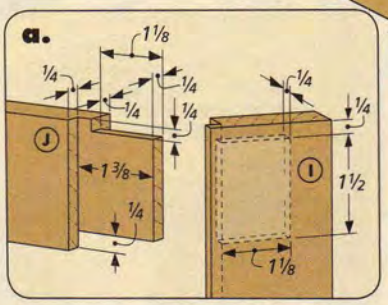

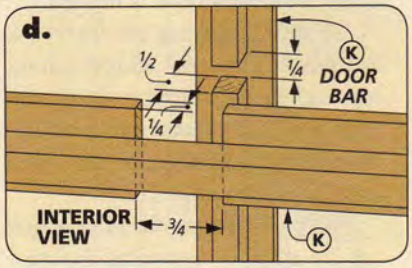

adding the DOORS

Making the divided-light doors can be tackled in two stages. First, you'll build a mortise and tenon frame. Then the grid that divides the frame can be made and installed.

FRAME RABBETS. The frame and grid have a rabbeted lip to hold the glass panes. Here I took the traditional route and rabbeted the stiles and rails before the joinery was cut and the frame assembled. So once the frame pieces are cut to size, you can install a dado blade in the table saw to cut a rabbet along the back, inside edges (detail 'a').

NEXT MORTISES. Now you can lay out and cut the mortises in the stiles (detail 'a'). I drilled out the bulk of the waste at the drill press and finished the job with chisels.

OFFSET TENONS. Since the stiles are already rabbeted, the tenons have to be made with offset shoulders (detail 'a'). The back cheek of the tenon is shorter to bridge the rabbet in the stile. The How-To box below shows the technique.

TENON PINS. Once all the tenons are cut and fit, you can glue up the two frames and add a false pin to each tenon. These pins match those used on the case sides.

WRAP IT UP. With the frames complete, you can make and install the dividers and add the glass, as explained on the following page. Then the doors are ready to hang.

The hinges are mortised into just the door, not the case. And with the doors in place, I added a stop and magnetic catches (detail 'c'). Stylish pulls complete the look.

After the finish is applied, you have one more tough chore — deciding which wall will best show off your work. W

How-To: Offset Shoulders

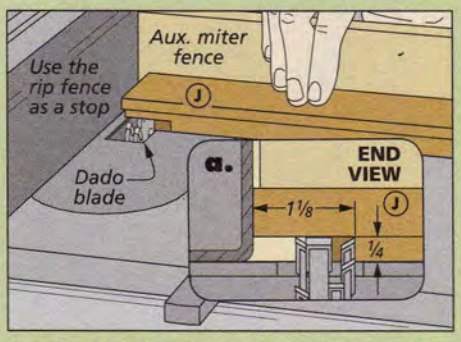

Inside Cheeks. *Start the tenon by setting up to cut the shorter inside cheeks. You want a shoulder-to-shoulder length of 10½".*

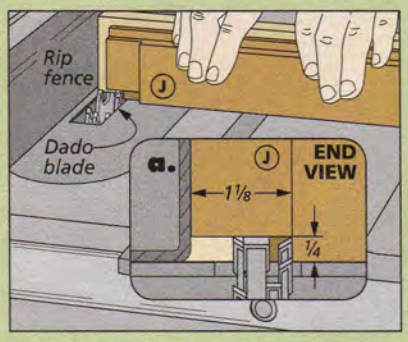

Edge Shoulders. *Next, use the same rip fence setting and blade height to cut the edge shoulders.*

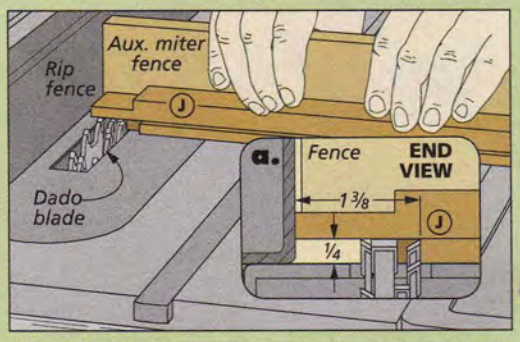

Outside Cheeks. *You'll need to adjust the rip fence for the outside cheek cuts. At this point, you can test fit the tenon to the stile mortise.*

How-To: Divided Lights

Adding the grid to the door frames is really pretty easy. You have the advantage of fitting the pieces to the frame as you go.

AN OVERVIEW. The grids are made from pieces of 3/4"-square stock that are rabbeted to form the T-shaped bars. The vertical and horizontal bars cross with a lap joint. The ends of the bars fit into slot mortises in the frame, as in the margin photo. The drawings at right provide a step-by-step guide.

RABBETS. With four 12"-long blanks in hand, the first step is to cut the bars to shape, as shown in Step One. The safest way to cut each rabbet is by making two passes across a standard blade.

TENONS. Once the bars are made and cut to final length, both ends of each piece need a tenon (Step Two). Your goal for this task is a snug shoulder-to-shoulder fit between the front edges of the frame. It's a good idea to fit a horizontal and vertical bar to each frame and then mark them.

LAP JOINTS. Next comes the centered lap joints. Detail 'd' on the opposite page shows how the joint goes together. The vertical bar has a narrow notch at the back, the horizontal bar has a wider notch on the front. Steps Three and Four show how to cut these notches.

SLOT MORTISES. The two bars can now be glued together. But before adding the grid to the frame, you need to cut the slot mortises.

I laid out the mortises by positioning the grid directly in the frame, as shown in Step Five. This is the best way to locate them accurately.

GLASS STOP. After cutting the mortises (Step Six), you can glue the grid in place. Then you just have one more part to make — the stop that holds the glass in the frame. This is a combination router table/table saw job (Step Seven).

ADD THE GLASS. When the stop is ready, you can add the glass. Just miter pieces around each opening, and then spot glue them in place.

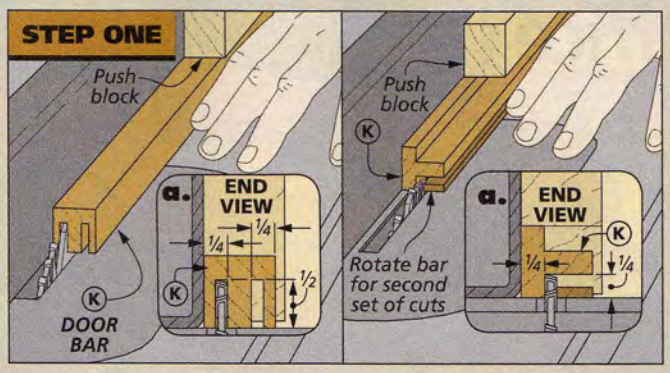

Shape the Bars. *The door bars are shaped with two sets of cuts. The first cuts size the "tongue" of the bar. The following cuts remove the waste and establish the outer shoulder.*

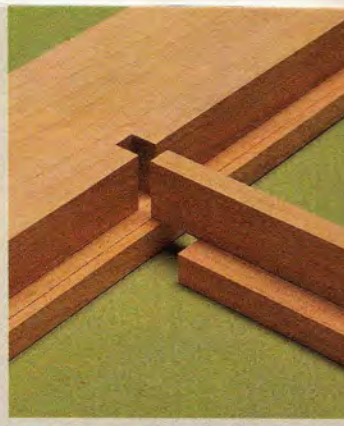

▲ The tenons on the ends of the bars fit neatly into slot mortises in the frame.

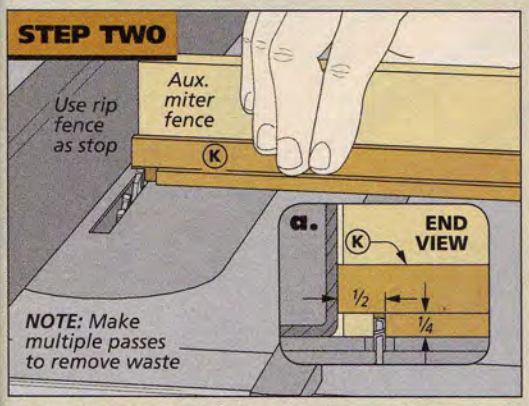

Cut the Tenons. *The tenons on the ends of bars can be cut with multiple passes across a standard blade. Check the fit to the frame.*

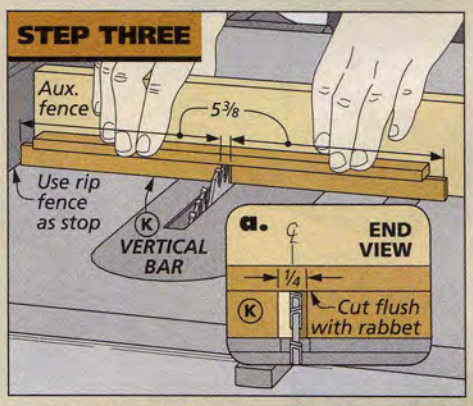

Narrow Notch. *Use the rip fence as a stop and flip the piece between cuts to make the narrow, centered notch in the vertical bar.*

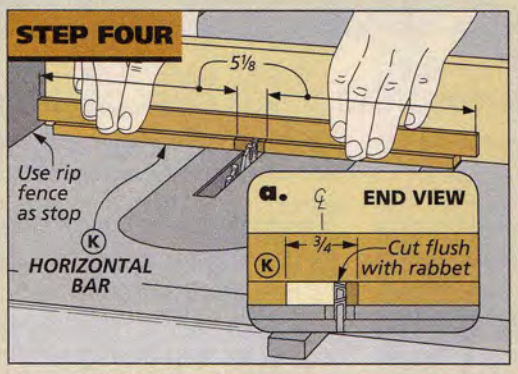

Wide Notch. *I cut the wider notches in the front faces of the horizontal bars with the same technique. But be sure to adjust the blade height.*

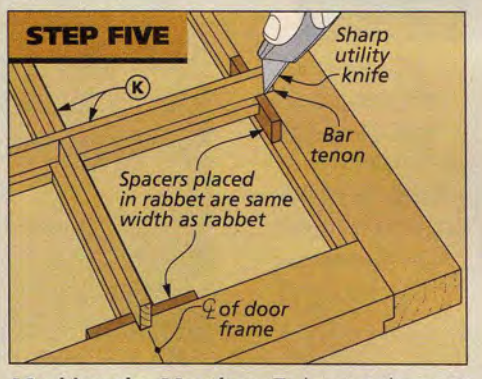

Marking the Mortises. *To lay out the mortises, use spacers matching the width of the rabbet to center the grid in the frame.*

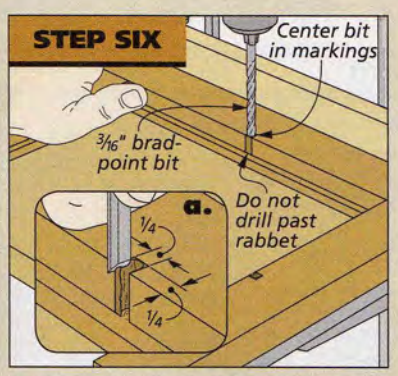

Drill and Chisel. *After drilling out most of the waste, I squared up the small slot mortises with a chisel.*

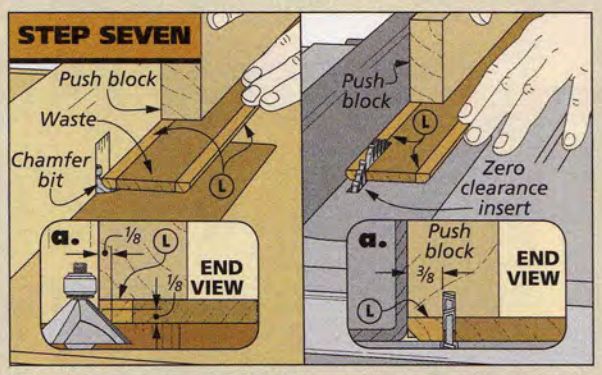

Glass Stop. *To make the glass stop, first rout a chamfer on two edges of a wide piece of 3/8"-thick stock. Then rip the stop free at the table saw and repeat the process.*

3-tier In-Box

Identical trays make this stylish desk organizer go together quickly. But the joinery lets you show off your woodworking skills.

Getting organized is not always an easy task. But whether you're organizing letters, mail, or any other papers, this set of desktop trays will help you get the job done, while adding flair to your office area as well.

The in-box is made around a simple frame. The upper tray is fixed to the frame, but the bottom two trays slide out on wood guides for easy access to stored items.

Even though the project is small, it's big on woodworking details. Miter joints reinforced with contrasting splines make the rounded corners of the frame and trays stand out. Plus, the contoured cutouts on each tray are easily shaped and add to the look.

FRAME FIRST

For a project like this I like to build the frame first and then size the trays to fit. The frame consists of two U-shaped assemblies connected by a pair of top rails that

Materials, Supplies & Cutting Diagram

A	Frame Sides (4)	1/2 x 2 - 9
B	Bottom Rails (2)	1/2 x 2 - 11 1/8
C	Top Rails (2)	1/2 x 2 - 12
D	Tray Guides (4)	1/2 x 1/2 - 12 1/8
E	Tray Fronts/Backs (6)	1/2 x 2 1/2 - 10
F	Tray Sides (6)	1/2 x 2 1/2 - 13
G	Tray Bottoms (3)	1/4 ply. - 9 1/2 x 12 1/2

- (4) #8 x 1" Fh Brass Woodscrews
- (8) 3/16" Flat Brass Washers
- (8) #8 x 1/2" Fh Brass Woodscrews
- (4) 1/2"-dia. Cork Pads

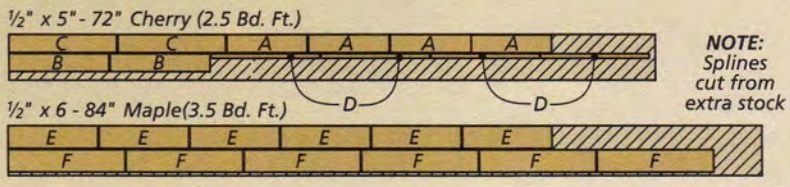

NOTE: *Splines cut from extra stock*

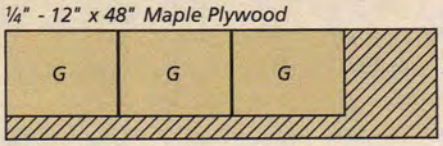

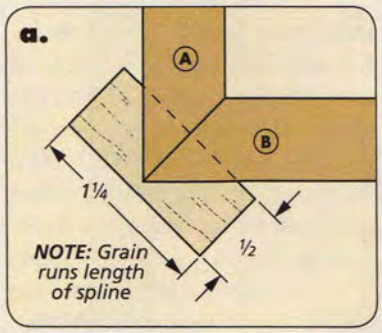

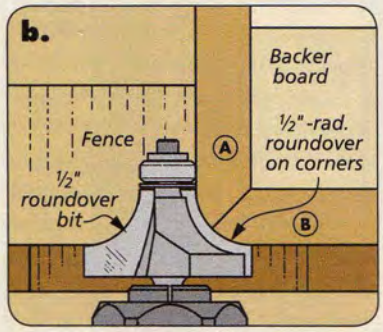

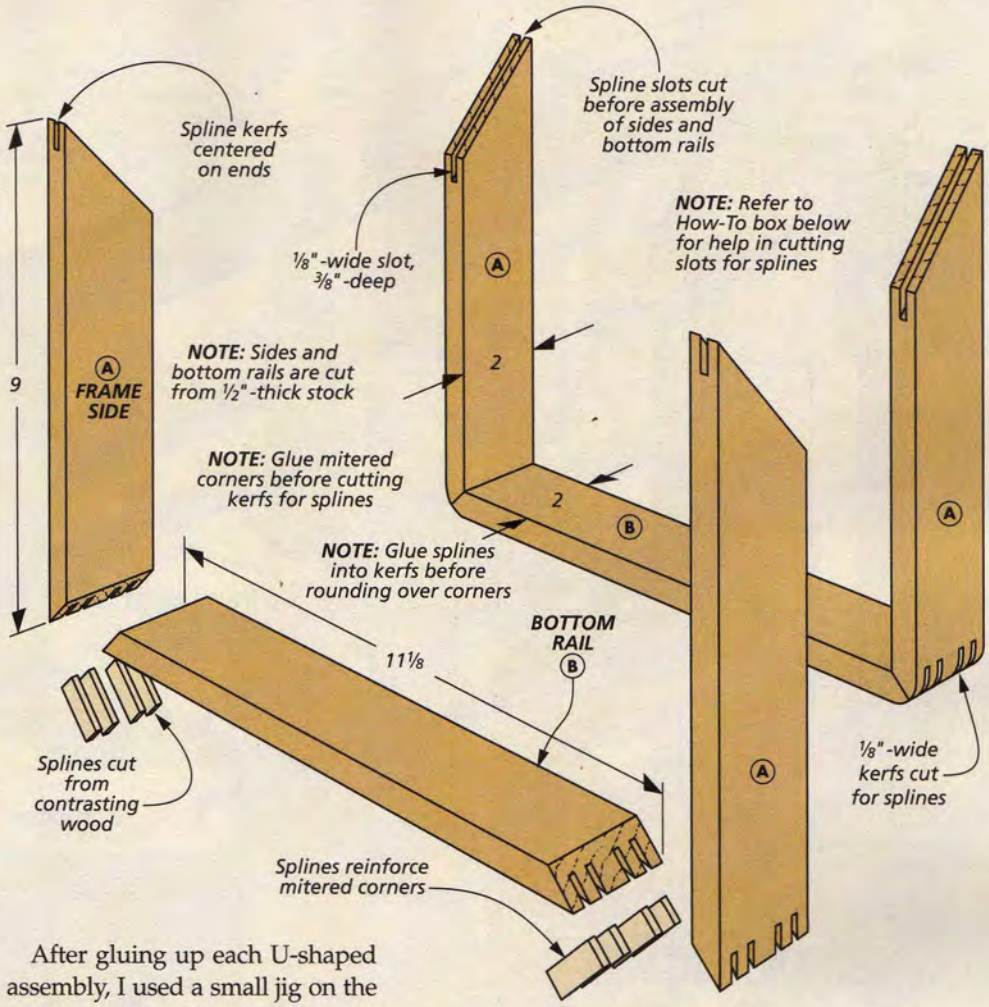

you add later. Each joint is reinforced with contrasting splines. Guides are added later for the lower two trays to ride on.

SIZING WORKPIECES. After the pieces for the frame are ripped to width, you can miter or bevel each piece to final length. You'll need to cut the slot for the cross-grain spline in the mitered corners now. A commercial tenoning jig will make short work of these slots. Or you can build a simple jig to cut the slots. There's more information in the How-To box below.

SPLINES. I assembled the frame by joining the bottom rails to the uprights first. I added glue to the mitered ends and just held them together by hand until the glue set up on each corner.

After gluing up each U-shaped assembly, I used a small jig on the table saw to cut the kerfs for the contrasting splines (right photo). You can read more about this jig in Shop Notebook on page 30.

Once the kerfs are cut, you can glue the splines in place at each of the corners (detail 'a'). When the glue is dry, use a hand saw and chisel to trim them flush with the bottom rails and sides. Then round over the joints on all four corners of the frame with a ½" roundover bit in the router table (detail 'b'). A backer board behind each cut, as shown in detail 'b,' will reduce chipping and tearout as the workpiece passes over the router bit.

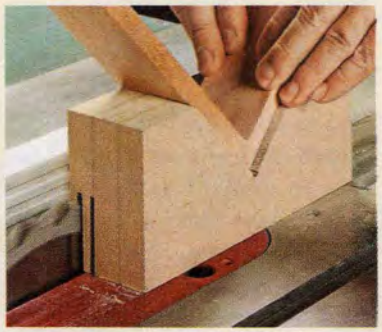

◄ Kerfs for the splines in the frame and tray will be spaced evenly with this jig. Read more about it in Shop Notebook on page 30.

There are just a couple more pieces to add to the frame of the in-box before it's ready for the contrasing trays. Just turn the page to get started.

How-To: Mitered Slot

To cut the slots in the mitered corners of the frame, I made a jig. It's nothing more than a plywood fence with an angled stop to support the sides as you cut the slots.

I cut the plywood fence as shown in the drawing at right. Then I attached the stop with screws.

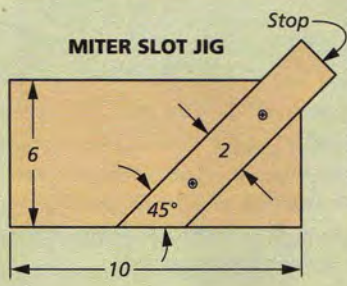

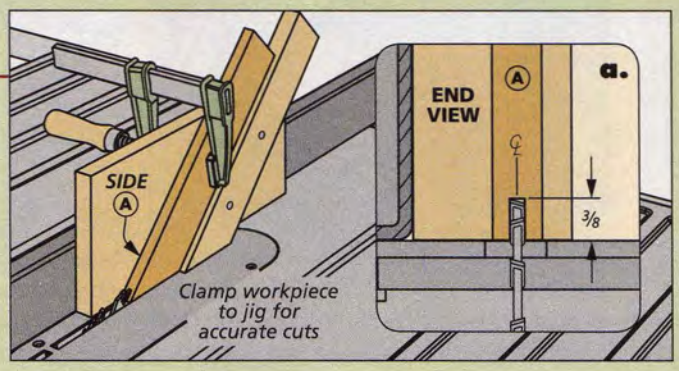

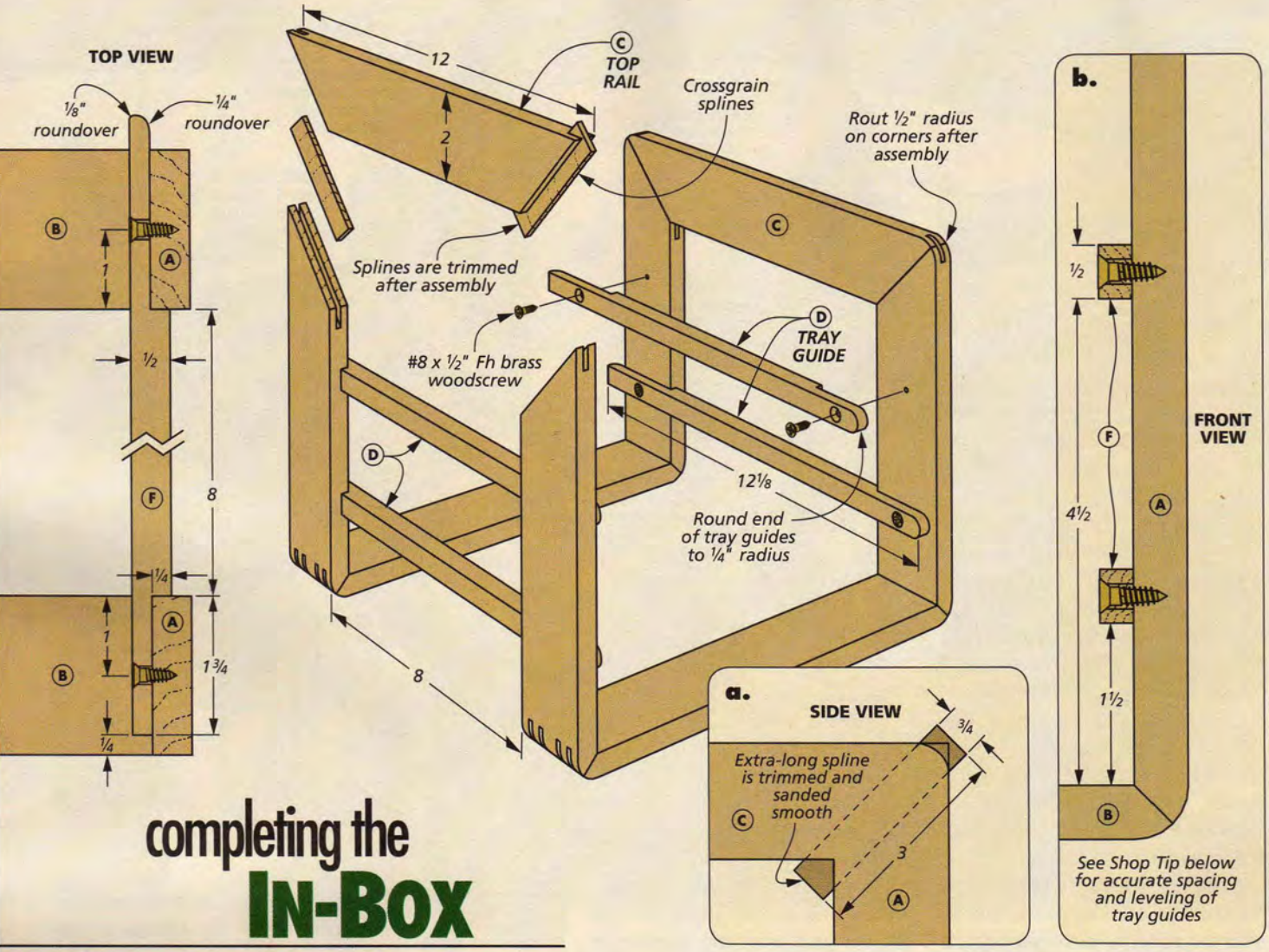

completing the IN-BOX

Two rails on the top join the U-shaped frames. After it's glued up, you can add the tray guides. Then three trays will complete the job.

TOP RAILS. Here again, the top rails on the frame are joined to the sides with splined miters. But these splines run through the joint and are cut across the grain. I cut the splines a little long and, after gluing them in place, used a coping saw to trim the corners. Then I sanded them smooth (detail 'a').

TRAY GUIDES. The final step for the frame is to add the tray guides. Each guide is rabbeted on the ends to fit snugly between the frame sides, as shown in the top view.

You can learn how to fit the guides to the frame in the Shop Tip at the bottom of the page. Once the guides are shaped, you can round over the front end of each guide with sandpaper, as shown in the drawing above. The back end can be rounded on the router table. I used spacers to position the guides (Shop Tip at left).

Shop Tip: Fitting Tray Guides

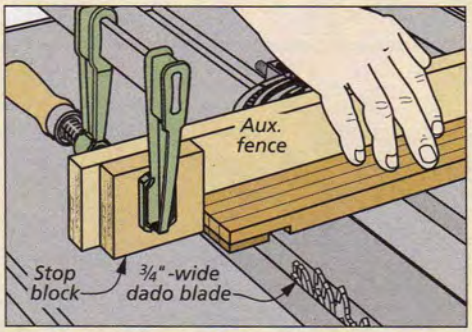

Cutting the Ends. *Cut the rabbets on both ends of the tray guide blank first for uniform length. Then rip individual guides free.*

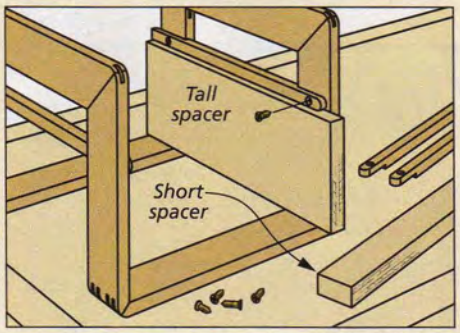

Positioning Guides. *A spacer positions the top guide as it's screwed to the frame. Cut it down for the lower guide.*

ADD THE TRAYS

Three trays complete the in-box. While the trays are all the same size, the upper one is screwed in place. The lower two trays ride on the guides you just added. I made cutouts on the front of all three trays for easy access to the contents.

TRAYS. Like the frame, the trays are built with contrasting splined miters and rounded over at each corner. Once you have the blanks for the tray fronts, backs, and sides

ripped to width, you can miter them to final length.

HAND CUTOUTS. Before assembling the trays, you'll need to take care of a couple details. First, I shaped the cutouts on the front of the trays. I drilled the inside corners with a Forstner bit and cut out the rest of the waste on the band saw (detail 'c'). Then you can smooth the curves with sandpaper.

PREDRILL. Another step you'll want to take now is to drill countersunk holes in the sides of the upper tray as shown in the drawing at right. This will make assembly easier.

CUT GROOVES. I cut the grooves for the plywood tray bottoms next (drawing in lower right margin). With the bottoms cut to size, you can assemble the trays using band clamps to pull the corners tight.

SPLINES. The kerfs for the splines that reinforce the corners of the trays are cut on the same jig you used earlier. Although the trays are wider than the frame, the kerfs are positioned the same distance from the top and bottom edge of each tray. Just position the trays in the jig, as shown in Shop Notebook on page 30, rotating the tray to cut the kerfs in each side. After the splines are cut and glued in, you can trim them and round over the corners as shown in detail 'b.'

TRAY SLIDES. The bottom two trays have grooves cut in the sides to fit over the guides (detail 'a'). The grooves are centered on each tray side. To cut the grooves, I installed a ½"-dia. straight bit in my router table and positioned the router table fence to center the bit on the workpiece. You can find a few tips for centering a bit in Shop Notebook on page 31.

The grooves are stopped ⅝" from the front of the tray (detail 'a'). A stop block clamped to the router table fence will keep you from cutting the groove too far.

TOP TRAY. The top tray is simply screwed to the frame with washers between the tray and the frame to match the gap in the lower trays. Spacers laid on the middle tray, locate the top while you attach it to the frame (main drawing).

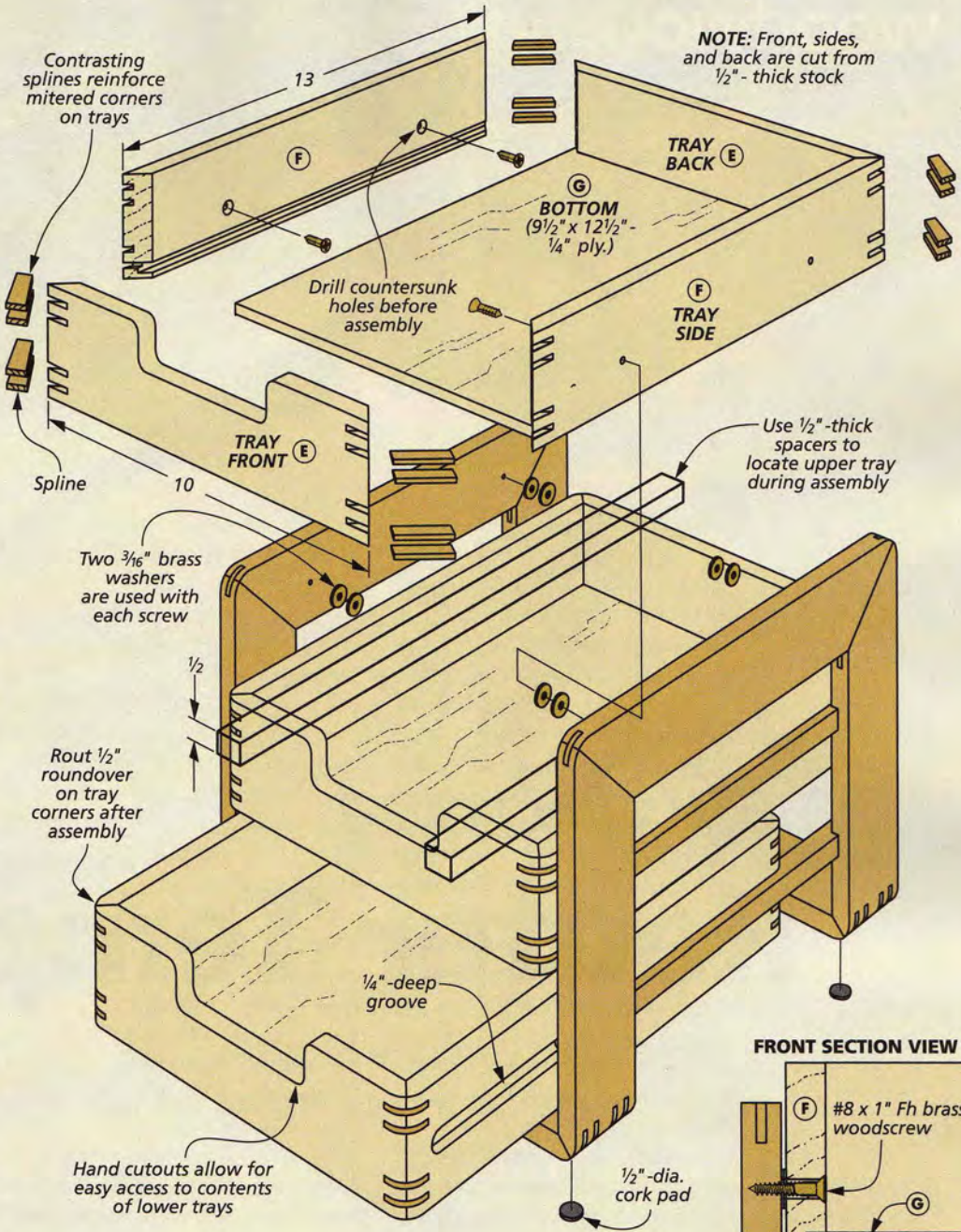

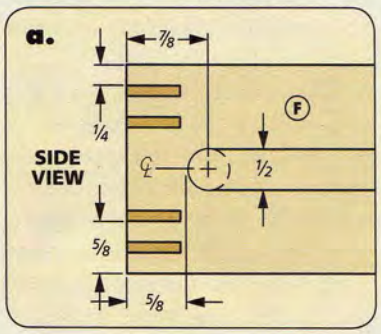

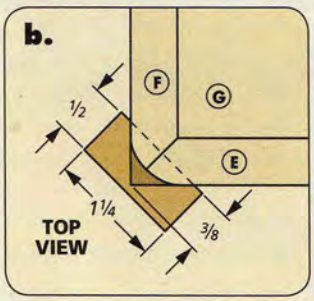

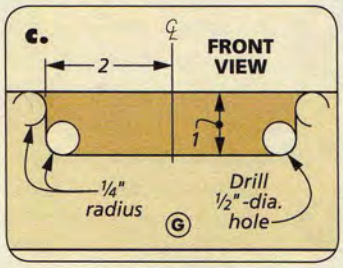

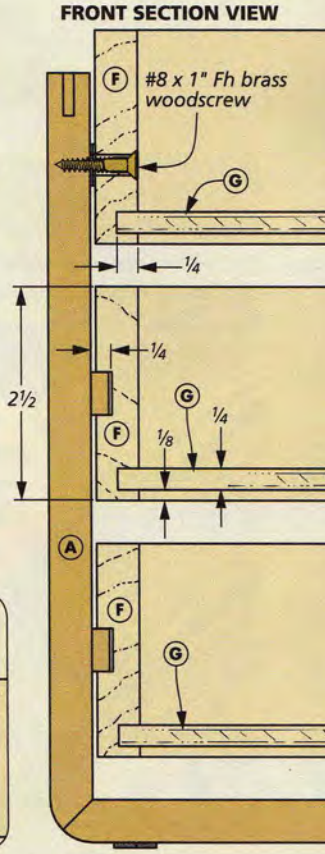

FINISH. I added a clear finish to all the surfaces but the guides and grooves. A little wax on these areas will help the trays slide in and out easily. Finally, attach the cork pads on the bottom and you'll have a handy place to store papers at home or in the office. W

Bearing-guided bit for bowl routing

making & using Router Templates

When it comes to making odd-shaped or identical parts for your projects, a router and a template will help you get high-quality results.

A flush trim bit has a bearing at the tip while a pattern bit has the bearing on the shank.

It's hard to overestimate the value of a router in the workshop. Often, the tasks you can perform in seconds with a router would take much longer with any other tool. And one way to get the most out of your router is to use it for making perfect duplicate or mating parts for a project. Usually this involves working with a template.

You might already be familiar with the idea of template routing from using a dovetail jig. In this application, a router equipped with a guide bushing follows the fingers of a dovetail template to cut perfectly spaced, tight-fitting dovetails in minutes.

This same concept opens up a lot of possibilities for creating matching pieces, tight-fitting joints, or seamless inlays. Once you learn to make your own templates and choose the right router bit for the task at hand, there are almost no limits.

SELECTING ROUTER BITS. Chances are, you already have at least one of the most common template routing bits. A flush trim bit, like the one shown in the margin photo, is the perfect choice for templates designed to fit beneath the workpiece. With a bearing at the tip riding against the template, a flush trim bit levels the edge of the workpiece to match.

This same combination works in a router table as well. Only at the router table, you can have the template on top of the workpiece instead of below. A good example of this is routing matching top rails for "tombstone" cabinet doors. The upper right photos on the opposite page show this concept in action.

But in some instances, when using a template with a hand-held router, you'll need to attach the template to the top of the workpiece. For this situation you have a couple of options. Usually, I turn to a pattern bit, also shown in the margin.

Often mistakenly called a flush trim bit, a pattern bit has the bearing on the shank of the bit instead of at the tip. This allows you to secure a template on top of a workpiece and clamp them both to your bench to rout the shape. And pattern-style bits aren't limited to straight cutters. The bowl-routing bit shown in the photos above is simply a different profile with a bearing on the shank to follow a template.

GUIDE BUSHINGS. The other way to rout a pattern from above the workpiece is to use a guide bushing. The bushing locks into the hole in the baseplate of your router to follow a template. Bushings are available in several different diameters so you can use a variety of router bits with them. (You can see an example of a guide bushing in the router inlay kit shown in the box below.)

The thing to keep in mind when using a guide bushing is that it will create an offset between the template and the workpiece. This means you'll need to account for the distance from the edge of the bushing to the cutting edge of the bit in your template design.

MAKING TEMPLATES. With a design and the right bit in mind, all that remains is to make a template. There are commercially made templates for all kinds of tasks and patterns. But it's worth taking the time to learn how to make your own, not only to save money but to accommodate the designs of your own projects. And it's not a difficult skill to master.

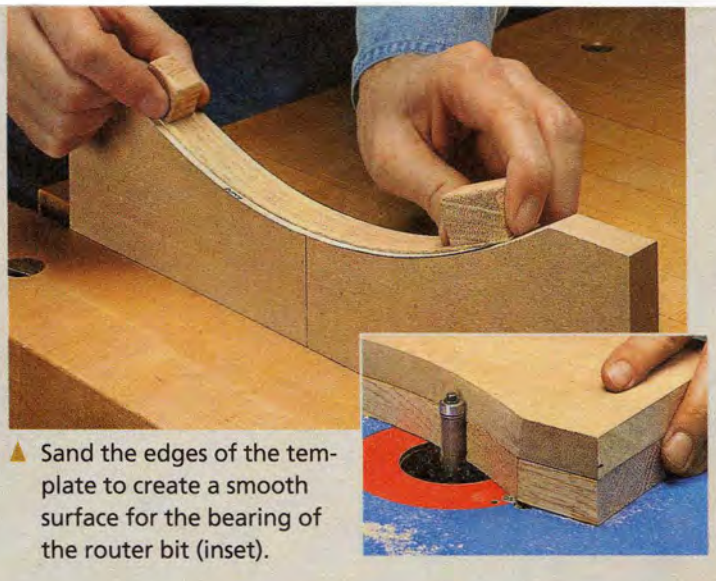

▲ Sand the edges of the template to create a smooth surface for the bearing of the router bit (inset).

MDF. Templates can be made from many kinds of material. MDF is a readily available option, and it's usually my first choice.

The reason I prefer MDF is that it's perfectly flat and very easy to shape with files and sandpaper. The template I use for making curved rails for cabinet doors shown in the photo above is a good example. To make it, I simply laid out the curve with a compass, cut out the shape at the band saw, and smoothed the curve, first with a file and then with a simple, shop-made sanding strip.

▲ One of the quickest and easiest ways to make an accurate template is to use hardwood scraps joined with pocket screws.

OTHER OPTIONS. Hardboard is another commonly used material. And occasionally I use acrylic, especially for those applications where I need to see more of the workpiece to orient the template to the grain of the wood.

On the other hand, a template can be as simple as small pieces of hardwood joined with pocket screws, like the one in the photo at left. This is an easy technique for making a template that conforms to a rectangular shape. All you need to do is fit the pieces together to form a template with the inside dimensions equal to the desired size and fasten them together.

With a little imagination, you can make a template for just about any shape you need for your projects. Whatever the application, you'll find that learning to make and use templates with your router will guarantee top-notch results. W

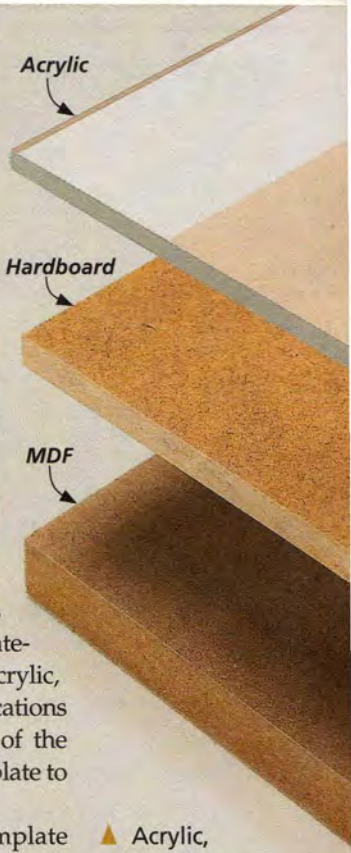

▲ Acrylic, hardboard, and MDF are good choices for making templates.

Worth a Look: Router Inlay Kit

One of my favorite ways to spice up a project is to add a decorative inlay made from contrasting woods. A specialized guide bushing with a removable sleeve makes this an easy operation. With the bushing installed, you can cut both the recess and the inlay piece using a single template.

ROUTING THE RECESS. After selecting a template for your design, start by positioning the template on the workpiece and securing it with double-sided tape. Then, with the sleeve on the bushing, simply rout the outline of the recess and the remainder of the waste by following the template. If necessary, square up the corners with a chisel.

THE INLAY. Now you can attach the template to the stock you've chosen for the inlay. After removing the sleeve, just rout the outline of the inlay and lift the router. Free the inlay from the board by resawing the piece at the band saw. With just a little practice, you can make perfect-fitting inlays in no time.

A router inlay kit allows you to add decorative inlays to almost any project. ▲

perfect cuts with **Coping & Fret Saws**

For smooth, curved cuts and other fine work, it's tough to beat the results you can get with these essential saws.

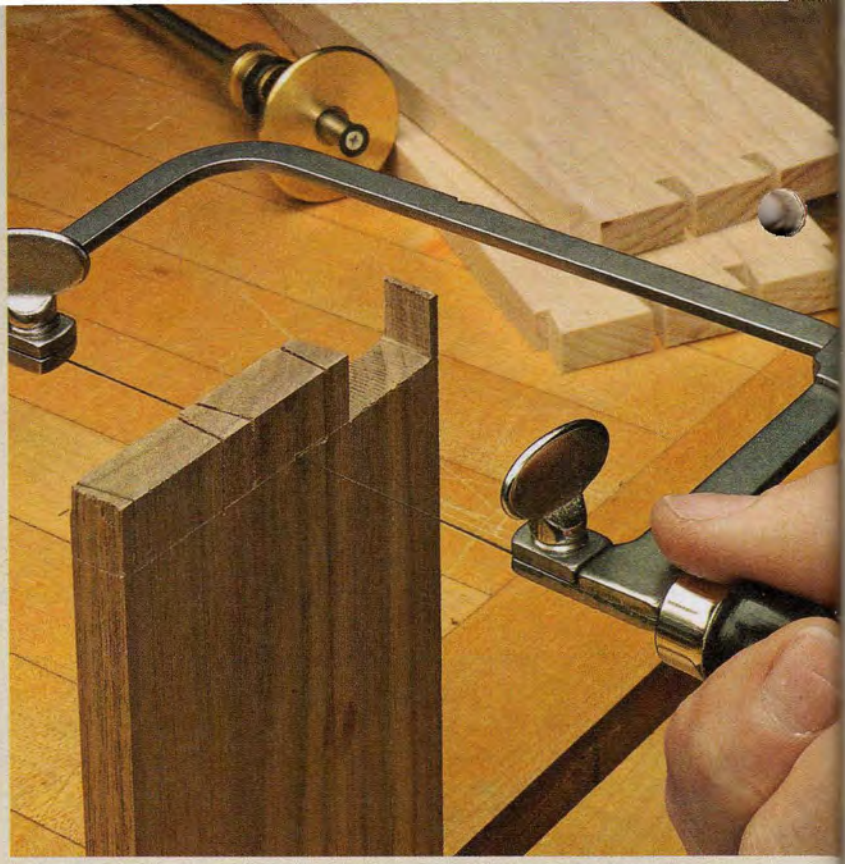

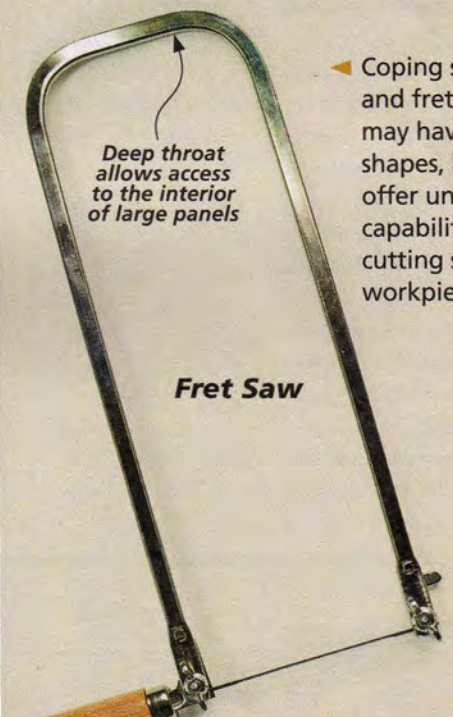

◄ Coping saws and fret saws may have odd shapes, but they offer unique capabilities for cutting small workpieces.

You don't always need to turn on a power tool like a jig saw or band saw to cut curved workpieces. If the pieces are small, a coping saw, or its cousin the fret saw, might be the better choice. Though it's often dismissed as just a rough carpentry tool, a coping saw can be extremely useful in the woodshop. And fine-cutting fret saws have been a mainstay of high-quality furniture making shops for a very long time.

COPING SAW

Chances are you already have a coping saw around the shop. For many woodworkers, this was the first saw we ever picked up. Its short blade and fine teeth make it safe enough for a young person to try their hand at woodworking.

A coping saw is simply a C-shaped, steel frame with pivoting blade holders that capture pins on the ends of the blade. A few twists of the handle tighten the blade. This puts the blade under tension and allows it to cut fast, tight curves in just about any material. You can install the blade to cut either on the push or pull stroke, although for most work I find that a pull cut is easier to control.

Of course, the saw gets its name from the coping cut used to fit molding together in place of a miter joint. That use has kept the saw in every finish carpenter's tool box for over a hundred years. The availability of blades to cut wood, plastic, and even ceramic tile also make it an indispensable handyman's tool.

In the woodshop, a coping saw also excels at cutting curved parts for furniture and is especially useful for making interior cuts. All you need to do is drill a hole in the workpiece and thread the blade through it. Then mount the blade in the saw to make the cut. And by rotating the blade in the frame, you can angle it to reach into inside corners.

Unlike most other hand tools, there are no "high-end," expensive coping saws. For about $15, you can buy a well-made saw that will probably last a lifetime. And high-quality blades will only set you back about $5 for a dozen. You can learn more about the blades in the box at the bottom of the opposite page.

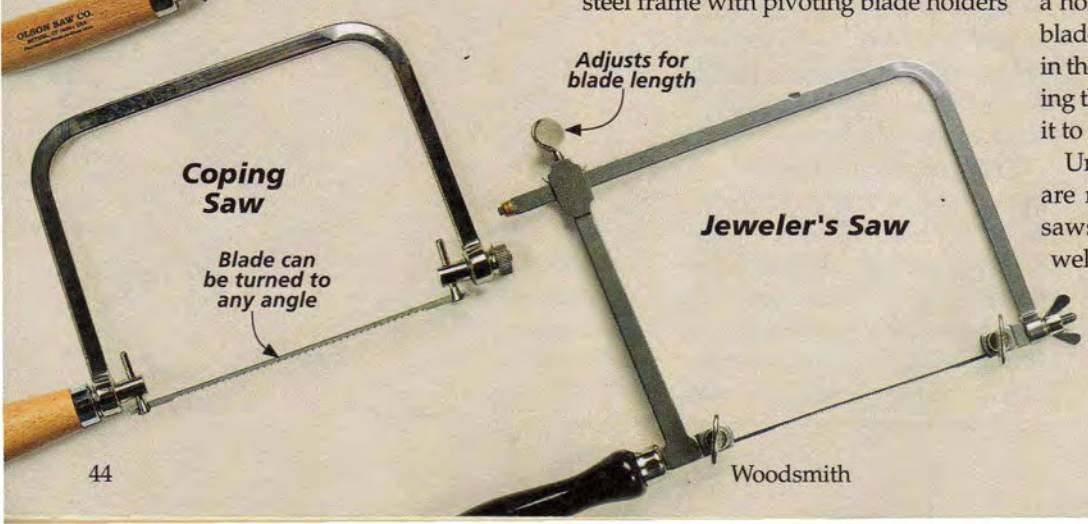

FRET SAWS

A close cousin of the coping saw, the fret saw is the tool of choice for intricate work. At first glance, the deep-throated fret saw shown in the photo on the opposite page looks a lot like a stretched-out coping saw. But closer examination shows an important distinction. The method for attaching the blade is quite different. Fret saw blades do not have pins. Instead, clamps on the saw hold the ends tight. An added benefit of this clamping method is that you can use commonly available scroll saw blades.

The smaller fret saws are sometimes called jeweler's saws because of their frequent use in cutting precious metals. In addition to the blade clamping mechanism, these saws also feature an adjustable frame. This enables them to accommodate different blade lengths.

USING A FRET SAW. You wouldn't want to use a fret saw for the heavy work of a coping saw. The thinner blades aren't designed for heavy cutting. But it's capable of much greater precision. The saw gets its name from the delicate patterns characteristic of classic fretwork designs. Even if you don't intend to do this kind of work, there are some common woodworking tasks that a fret saw will make easier.

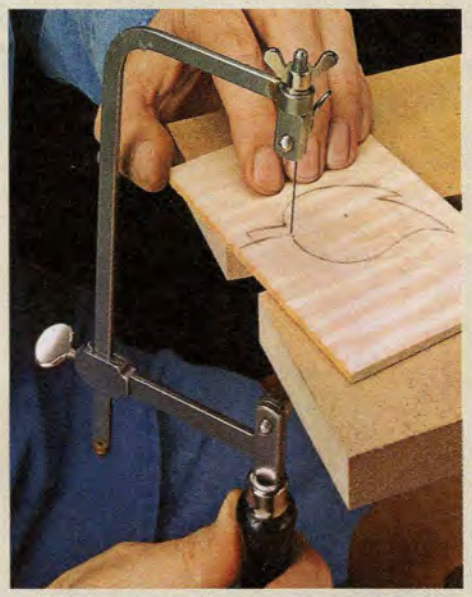

With the aid of a bird's-mouth table to hold the workpiece, you can cut inlay pieces quickly and accurately.

DOVETAILS. When it comes to hand-cut dovetails, a fret saw is the fastest way to remove the waste between the pins and tails. After laying out and cutting the shapes, a few quick strokes with the fret saw completes the dovetails. The extremely fine blade fits easily in the kerf of the dovetail saw cut and even has plenty of room to turn the blade to make the cut. All you need to do is cut along the scribed baseline. Once you get the hang of it, you'll hardly need to do any clean up with a chisel.

INLAY WORK. Another application where the fret saw really shines is cutting small, intricate pieces for inlay or marquetry work. Here again, the blade can follow even the tightest curves of your patterns. Since these workpieces are often very thin, a method of support is crucial to making a successful cut.

A fretwork cutting table, sometimes called bird's-mouth or V-board, is often used to hold a workpiece. You can see this in action in the photo at left. The V-shaped cutout on the table gives you plenty of room to move the saw while supporting both ends of the workpiece.

BREAKING BLADES. On the downside, the thin blades that make the fret saw a great tool for intricate work, also make for frequent blade breakages. But you'll quickly learn how to get the most life out of each one. Usually, this means avoiding binding it in a cut.

If you don't already have a coping saw and fret saw in your shop, you should consider spending a little bit of money to add them to your tool collection. After a few cuts, you'll be a believer. W

The blade clamping mechanisms are an important distinction between coping and fret saws.

Coping & Fret Saw Blades

While the saws get all the credit, it's really the range of blades for coping and fret saws that makes them such handy tools. Specialized coping saw blades can be purchased to cut plastic, metal, and even ceramic tile. And a fret saw equipped with a metal-cutting blade can come in handy for cutting soft metals.

COPING SAW BLADES. Woodworking blades are commonly available in 10, 15, 20, and 24 teeth per inch (tpi). The 20- and 24-tpi blades leave an extremely smooth finish, while the 10- and 15-tpi blades are great for an aggressive, fast cut.

FRET SAW BLADES. Fret saw blades are sold by gauge rather than teeth per inch. The gauge indicates the thickness of the blade. For example, a 2/0 blade is .011" and the 3/0 is .009". These are the most common sizes used by woodworkers. For a more aggressive cut or when working with thicker stock, you can install a scroll saw blade on a fret saw. The wide variety of scroll saw blades means you'll find one suited for almost any task.

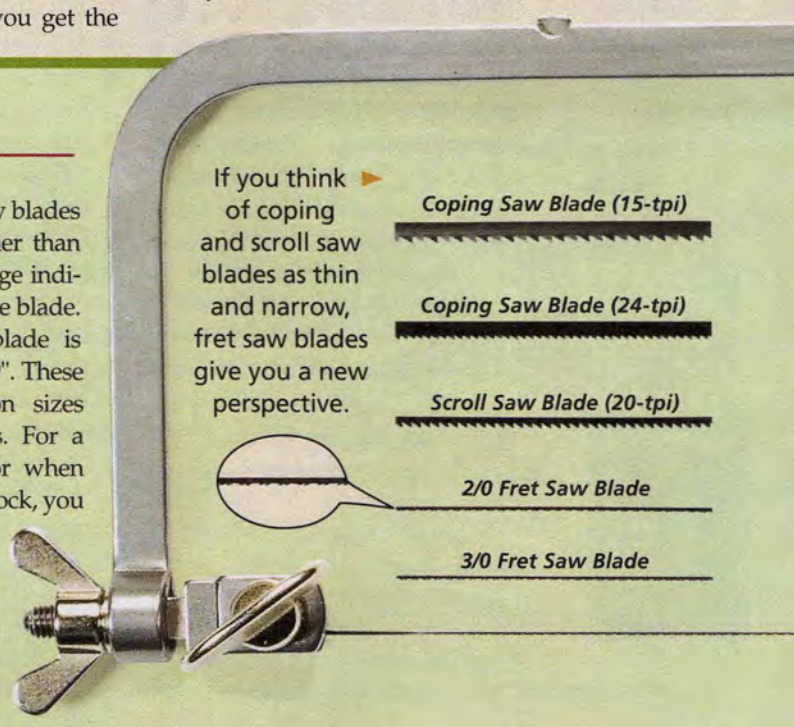

If you think of coping and scroll saw blades as thin and narrow, fret saw blades give you a new perspective.

3 easy ways to apply Shellac

For a top-notch finish, user-friendly shellac is always a good bet.

Shellac has always been one of my favorite finishes — for a couple of reasons. It's both versatile and easy to use. And when it comes to producing a quality finish, that combination is hard to beat.

Shellac is almost universally compatibile with other types of finishes and stains. It's the perfect sealer. And on its own, shellac makes a great, easy-to-apply finishing system — sealer *and* topcoat.

Shellac may be the fastest drying finish. It dries to the touch in minutes and can often be re-coated in as little as half an hour. And to top it all, shellac can be successfully applied using any of the standard methods — brushing, wiping (called padding), or spraying.

The only minor knock on shellac is its moderate durability and lack of moisture resistance. This just means it's not suitable for all types of projects. You probably wouldn't want to put a shellac finish on a high-traffic kitchen table. But for a project that will see limited wear, it can be a perfect.

One key to a successful shellac finish is to dilute it to suit your application method. ▼

STARTING CUT	DESIRED CUT			
	½ lb.	1 lb.	1½ lb.	2 lb.
1 lb.	7/8:1			
2 lb.	2:1	2/3:1	1/4:1	
3 lb.	3 3/4:1	1 1/2:1	3/4:1	1/3:1

Ratios shown in parts alcohol/parts premixed shellac by volume

THE BASICS. Shellac is made from a resin secreted by the lac bug. The resin is refined, filtered, and then dissolved in alcohol. When applied to a surface, the alcohol rapidly evaporates leaving a film of shellac (referred to as an evaporative finish). And each following coat "melts" into the previous coat to form a single, tough film.

Shellac can be bought in flake form and then mixed with alcohol as needed, or purchased premixed. Premixed shellac is my preference. But mixed shellac has a shelf-life of about 18 months, so check the origin date to make certain it's fresh.

You'll find both clear and amber (also called orange) shellac on the store shelf. I use clear shellac as a colorless finish over stain. Amber shellac makes a great toner, giving certain woods a beautiful, aged appearance, as you can see on the cherry tabletop above.

THE CUT. Shellac isn't applied in one standard concentration. You'll often want to vary the ratio of resin to alcohol to get the best result. This concentration is referred to as the "cut" and is denoted in pounds of resin per gallon of alcohol.

Most premixed shellac is sold in a 3 lb. cut (3 lbs. of resin per gallon of alcohol). This is too thick to apply easily. The shellac will tack up before it has a chance to flow out into a smooth film. I always thin

shellac to a 2 lb. or even 1 lb. cut. A thinner cut will build slower and require more coats, but it produces a much nicer end result. The chart in the margin of the opposite page shows how to dilute premixed shellac to the proper cut.

BRUSHING SHELLAC. Probably the most common way to apply shellac is with a brush. You want to start with a 1½ or 2 lb. cut. At this dilution, the shellac will flow out well on horizontal surfaces but won't run badly on vertical edges.

The only trick to brushing on shellac is to work quickly and don't over-brush. The thinned shellac will level itself well, so concentrate more on covering the surface than brushing and re-brushing. Use long, overlapping strokes working with the grain (upper right photo).

The shellac will begin to tack up pretty quickly, so don't brush back over an area that's been covered — you'll just drag the partially dried shellac, creating a rough film. And you'll want to blend covered and uncovered areas fairly quickly before the shellac starts to dry.

Vertical surfaces may require a slightly different approach. The goal is to prevent the shellac from sagging and running. This is accomplished by applying a lighter covering and then brushing it out a bit more. You can watch for runs and then brush them out immediately.

After the first coat is thoroughly dry (30 minutes to an hour), sand lightly and repeat the process. A second or third coat will dissolve into the previous coats, so use a light touch when brushing. The number of coats you apply will depend on the look and film thickness desired. Three coats will give you a light film. Four or more coats will give you a thicker build that can be rubbed out with steel wool.

PADDING SHELLAC. Shellac can also be applied very successfully with a folded cloth or pad, as shown in the main photo on the opposite page. Padding on shellac shouldn't be confused with the more complicated process of French polishing. When padding on shellac, the pad is simply an alternative to a brush. It allows you to get the job done very quickly with excellent control of the film thickness.

When padding on shellac, I use a 1 lb. cut. A thin cut will flow from the pad to the surface much easier and won't leave streaks.

The pad can be made from any soft, lint-free cloth. Fold the sides and ends in to create a palm-sized pad with a smooth, rounded bottom (inset photo, opposite page). You want the pad to have enough bulk to hold and discharge an adequate amount of shellac.

▲ Shellac can be applied with a synthetic or natural-bristle brush. Use long strokes and avoid over-brushing.

Since you'll need to dip the pad into the shellac, a wide mouth jar makes a good container. Another option is to dispense the shellac from a plastic squeeze bottle.

Padding on shellac works great on flat surfaces. With the pad fully charged, sweep in from one end, "brush" along the surface, and then lift off to complete the stroke. You can control the amount of shellac being discharged from the pad by the amount of pressure you apply. In essence, you squeeze the shellac from the pad as you move it along. Just as with a brush, avoid working back over tacky areas. Cover the surface quickly and then leave it.

It can be slightly more difficult to get into corners and contours with a pad, but generally it can be done without too much effort. And on vertical surfaces the pad allows you to easily avoid runs.

You can pad on multiple coats of shellac in pretty short order. It may take a few extra coats to get a good build, but with only a short wait between coats, it goes quickly.

FASTER STILL. When I'm in a hurry or working on a large project, I'll get out my spray gun. You'll find that shellac sprays as easily as lacquer, without producing nearly the amount of strong fumes. Check out the box at left for more.

I won't go so far as to say shellac is a foolproof finish, but it's very close. Choose the application method that best suits your project and it's hard to go wrong. W

How-To: Spray Shellac

If you have the equipment and a suitable ventilated area, spraying on a shellac finish can't be beat. You can cover a large area very quickly and with the proper technique, the shellac will lay out glass-smooth.

One key is to use a dilute cut (about 1lb.) and spray it in thin coats. The shellac will atomize easily and begin to dry almost before it lands on the surface.

Just follow a normal spraying routine — hard to reach places first, then edges, and finally flat surfaces. Keep the gun moving steadily to avoid uneven or excessive coverage that may cause runs.

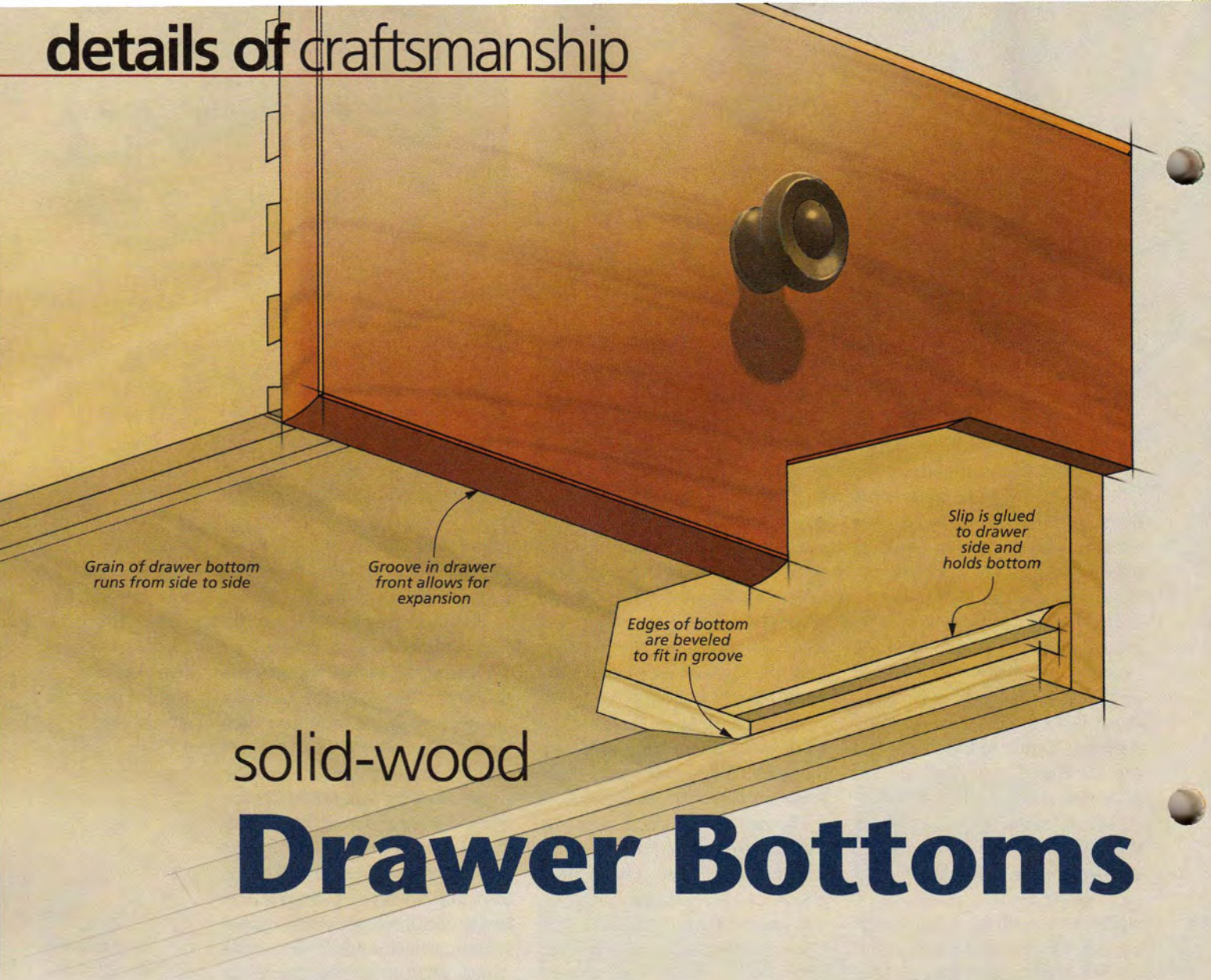

solid-wood Drawer Bottoms

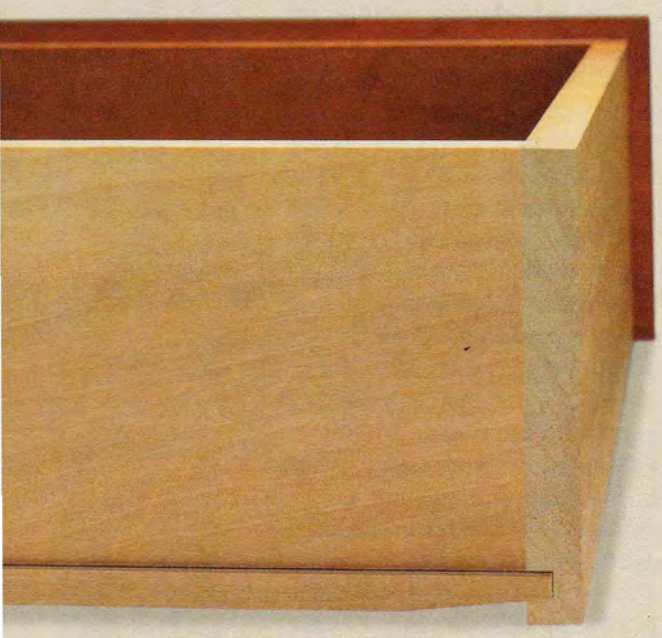

▲ When building a drawer with a solid-wood bottom, the back of the drawer is cut narrow so the bottom can be slid underneath it.

Add authenticity to your heirloom projects by incorporating this traditional feature.

Whenever I'm building a project that includes drawers, I usually make the drawer bottoms out of plywood or hardboard held in grooves on all four sides. This method is quick, simple, and makes for a reasonably strong drawer with a minimum of fuss.

But if you're building a reproduction or an heirloom piece of furniture, there's something about slapping a piece of plywood into the bottom of the drawer that doesn't seem quite right. Before the invention of plywood and other man-made wood products, cabinetmakers relied on solid wood for drawer bottoms. And whenever I'm building a special piece of furniture, I like to do the same.

However, using solid-wood drawer bottoms requires some general knowledge about wood movement. And you'll also need to know a few things about drawer construction as well. So here's a look at some points to keep in mind.

WOOD MOVEMENT. The biggest consideration when using solid wood for a drawer bottom is wood movement. Unlike plywood or hardboard, a solid-wood drawer bottom is going to expand and contract across the width with seasonal changes in humidity. Because of this, you can't simply

capture the drawer bottom in a groove on all four sides of the drawer like you would with a plywood or hardboard bottom.

Instead, you'll have to construct the drawer in such a way as to allow the drawer bottom to expand and contract as needed. One of the most common ways of doing this is to make the back of the drawer narrower so the bottom passes underneath it, as shown in the upper drawing at right.

After the drawer front, back, and sides are assembled, the bottom is slid into the grooves along the sides from the back. A small nail or screw pins the bottom to the drawer back, and an extra deep groove in the drawer front allows for wood movement. This way, the bottom is free to expand and contract from front to back. (See the box below for a related tip.)

GRAIN DIRECTION. In order for this to work, of course, you'll also need to pay attention to grain direction of the drawer bottom. Make sure the grain runs from side to side so the drawer bottom expands and contracts from front to back.

STRENGTH. Another factor to consider when using solid wood for drawer bottoms is thickness. Although I frequently use ¼" plywood or hardboard for drawer bottoms, when using solid wood you'll probably want to go with a thicker bottom for all but the smallest of drawers. Typically, I use ⅜"- or ½"-thick stock for solid-wood drawer bottoms.

Using material this thick for drawer bottoms creates another consideration, however. Cutting ½"-wide grooves to hold the drawer bottom can really weaken the drawer sides. Fortunately, there's a simple solution.

By beveling the edges, you can create a thick drawer bottom that will still fit into a narrow groove. You can see an example of this in the photo on the opposite page and the middle drawing at right.

DRAWER SLIPS. Another method that was traditionally used on higher-quality furniture was the addition of drawer slips. These are nothing more than narrow strips of wood that are grooved to hold the drawer bottom and then glued to the sides of the drawer (lower drawing at right). Because you're not removing any material from the sides, this method results in a stronger drawer.

When all is said and done, making drawer bottoms out of solid wood is a detail only you may ever notice. But I find it's one of those little things that makes the difference between an ordinary project and one that's extra special. W

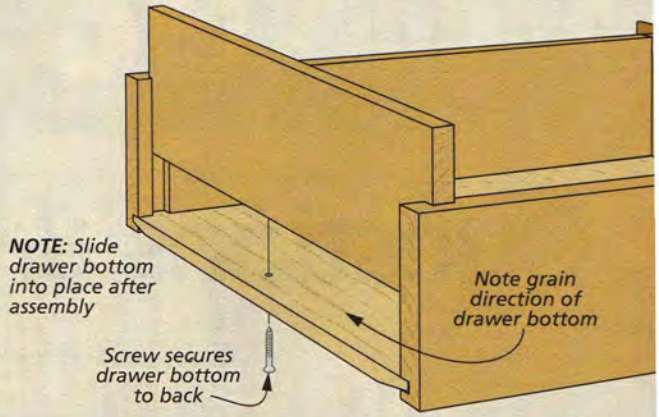

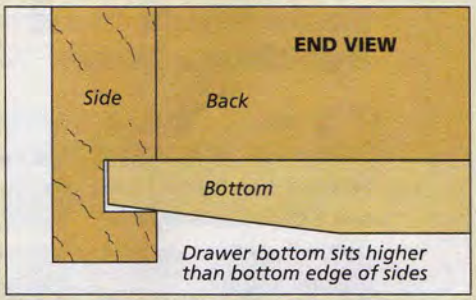

Beveled Edges. *Beveling the edges of the drawer bottom allows you to use thicker stock without increasing the width of the groove.*

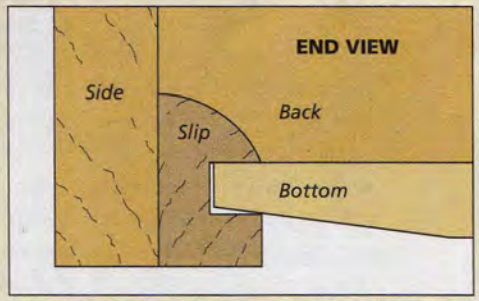

Slips. *Hardwood slips hold the drawer bottom securely without compromising the strength of the drawer sides.*

How-To: Drawer Bottom as a Stop

When making small drawers, I sometimes use the bottom of the drawer as a stop. Simply make the drawer bottom a bit wider (longer) so that it extends out the back of the drawer, hitting the back of the case and stopping the drawer.

By starting with an extra wide drawer bottom, you can plane material off the back edge a little at a time until the drawer stops where you want it to.

You can use this technique with plywood or hardboard drawer bottoms as well. Just trim the bottom to the correct width at the table saw before permanently installing it in the drawer.

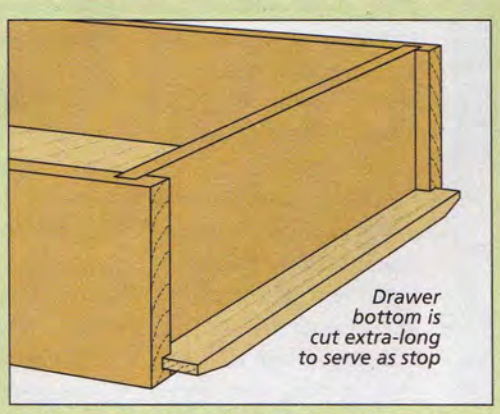

Built-In Drawer Stop. *Cut the drawer bottom extra-long, so that it extends well beyond the back and sides of the drawer.*

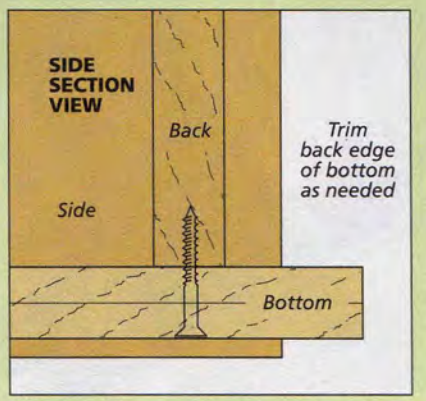

Trim to Fit. *Trim the back edge of the drawer bottom to contact the back of the case when the drawer is closed.*

Questions & Answers

Dado Blades and Benchtop Saws

Q ***I have a benchtop table saw and I wanted to know if I can use a dado blade with it? If so, what's the best type of blade to buy?***

Wyatt DeLay
St. Paul, Minnesota

A Although a benchtop table saw can perform many of the same tasks as a larger, contractor's saw, there are a couple of things to consider when it comes to using a dado blade with a benchtop saw. The first is the power of the motor. And the second is the length of the arbor.

POWER. Because a dado blade is heavier and removes more material than a standard saw blade, it requires more power. But most benchtop saws use small, universal motors that aren't as powerful as the motors on larger saws.

Because of this, it's a good idea to use a 6"-dia. dado blade on a benchtop saw. The smaller diameter means less weight and less torque required to turn the blade.

Since the majority of dadoes you're likely to cut are under ¾" deep, this shouldn't be a problem. A 6"-dia. dado blade has more than enough capacity for most dadoes.

LENGTH OF ARBOR. But power isn't the only consideration when using a dado blade. The other thing you'll want to check is the length of the arbor on your saw, which will dictate the width of the dado blade you can use (photo at left).

A good way to determine this is to measure the length of the arbor and then subtract the thickness of the nut.

If the arbor on your saw is relatively short, you probably won't be able to use a "wobble" type dado blade, like the one shown above, since the hub is too thick to allow the nut to thread onto the arbor.

With a stacked dado blade, like the one shown on the right, this isn't as much of a concern. Even if you can't fit the entire dado stack on the arbor, you can use the two scoring blades and one or two chippers.

This means you may need to make a couple passes for wider dadoes. But overall, it's a small price to pay for the convenience of being able to use a dado blade.

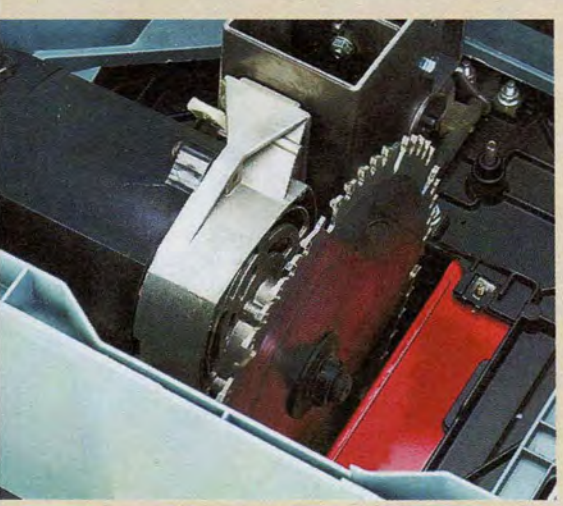

▲ Some benchtop saws have short arbors. The one shown here will only hold the outer blades and a couple of chippers.

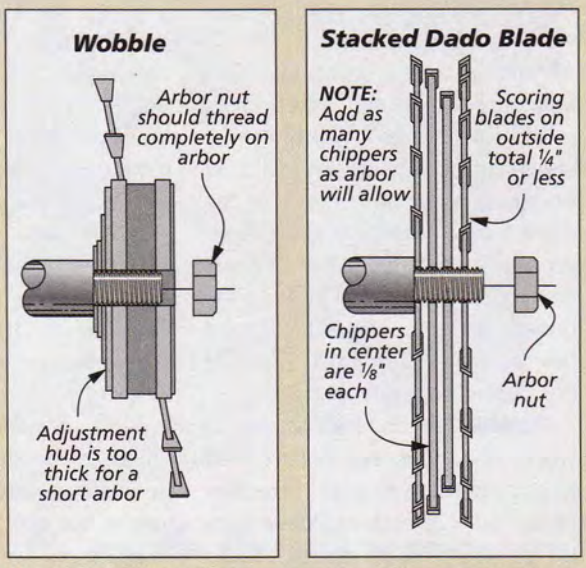

▲ A wobble blade, shown on the left, has a thick hub that won't fit a short arbor. But the same arbor will hold a portion of a stacked dado blade.

Do you have any questions for us?

If you have a question related to woodworking techniques, tools, finishing, hardware, or accessories, we'd like to hear from you.

Just write down your question and mail it to us: Woodsmith Q&A, 2200 Grand Avenue, Des Moines, Iowa 50312. Or you can email us the question at: woodsmith@woodsmith.com.

Please include your full name, address, and daytime telephone number in case we have questions.

Sources

VENEER

The best place I've found to purchase veneer is *VeneerSupplies.com*. It's a well-organized site that shows photos of the actual flitches that are sale. All you need to do is choose your wood species, price range, and favorite wood pattern. Another good site is *B&B Rare Woods*. They also show photos of the veneer sheets and flitches they have in stock.

Backed veneer can be purchased at many lumberyards and home centers. It's also available at *VeneerSupplies.com*.

DUST COLLECTION

Choosing the right dust collection system for your shop isn't too difficult with the many options available on the market today. You can find dust collectors at *Rockler* or *Penn State Industries*, as well as several other sources.

Rockler also sells the plastic adapters (36337) to link PVC to your collector and the metal duct work for collection. PVC pipe, and plastic duct work to route dust to the colletor, is available at most home centers or hardware stores.

CONCEALED HINGE JIGS

Drilling the cup holes for Euro-style hinges is easier with the *Concealed Hinge Multi-Tool JIG-IT* (31126) from *Rockler* or the *Euro-Eze II* (951-640) from *Woodworker's Supply*.

STORAGE BENCH

Organizing an entry way in your home will be easy with the bench project on page 22. We purchased the wicker baskets (9" x 12¼" x 15") for the bench at *Pier 1 Imports*.

The finish on the bench seat is three coats of lacquer to let the natural wood show through. The remainder of the bench is painted with *Benjamin Moore Paint* Corinthian White (OC-111).

WALL CABINET

You'll be able to display treasured keepsakes or just about anything in the Craftsman-style wall cabinet that begins on page 32. The pulls (01A22.94), hinges (02H12.41), magnets (99K31.03), and washers (99K32.62) were purchased at *Lee Valley*. The finish is a custom mix of three parts *Zar Cherry Stain* to 1 part *Jel'd Cherry Stain*.

THREE-TIER IN-BOX

There are only a few pieces of hardware for the three-tier in-box on page 38. The screws and washers for the trays and the cork pads for the bottom can be purchased at a local hardware store or home center.

I decided to let the natural color of the cherry and maple shine through. The finish was just three coats of lacquer.

ROUTER TEMPLATES

Flush-trim bits and pattern bits like the ones shown in the article on page 42 are available from most router bit manufacturers. The bowl and tray bit (851.502.11B) by *CMT* is available at *Amazon*. Other bits are available at *Woodcraft*.

COPING SAWS AND FRET SAWS

When it's time to cut curves or do intricate work, nothing beats a reliable coping saw or fret saw.

You can purchase these saws and replacement blades at *Tools for Working Wood* or *Olson Saw*. Coping saws and blades are also available at most hardware stores and home centers. W

Online Customer Service

Click on *Magazine Customer Service* at **www.woodsmith.com**

- Access your account status
- Change your mailing or email address
- Pay your bill
- Renew your subscription
- Tell us if you've missed an issue
- Find out if your payment has been received

MAIL ORDER SOURCES

Project supplies may be ordered from the following companies:

Woodsmith Store
800-444-7527
Benjamin Moore Paint

Amazon
amazon.com
Router Bits

B&B Rare Woods
303-986-2585
wood-veneers.com
Veneer

Lee Valley
800-871-8158
leevalley.com
Hinges, Magnets, Pulls, Washers

Olson Saw
203-792-8622
olsonsaw.com
Coping Saws, Fret Saws

Penn State Industries
800-377-7297
pennstateind.com
Dust Collectors, Pipe Fittings

Pier 1 Imports
800-245-4595
pier1.com
Baskets

Rockler
800-279-4441
rockler.com
Concealed Hinge JIG-IT, Dust Collectors Ductwork

Tools for Working Wood
800-426-4613
toolsforworkingwoodcom
Fret Saws

Veneer Supplies
veneersupplies.com
Veneer

Woodcraft
800-225-1153
woodcraft.com
Router Bits

Woodworker's Supply
800-645-9292
woodworker.com
Euro-Eze II

Woodsmith®

8-VOLUME LIBRARY SET

Get all 8 hardbound volumes of ***Woodsmith*** (Volumes 22 through 29). Each volume includes a year of issues, plus a table of contents and a handy index.

Regular Price ..... ~~$239.60~~
Subscriber Discount Price ..... $159.95 ***SAVE OVER $75***

FREE SHIPPING on your entire order!

Individual volumes also available.
(Offer expires 5/31/09)

Go to Woodsmith.com
or Call 1-800-444-7527 Today to Order Yours!

looking inside
Final Details

▼ *Silverware Tray.* You won't have any trouble finding a good use for this traditional silverware tray. But first, you'll get to try your hand at making the angled box joints used to build it. The detailed plans start on page 16.

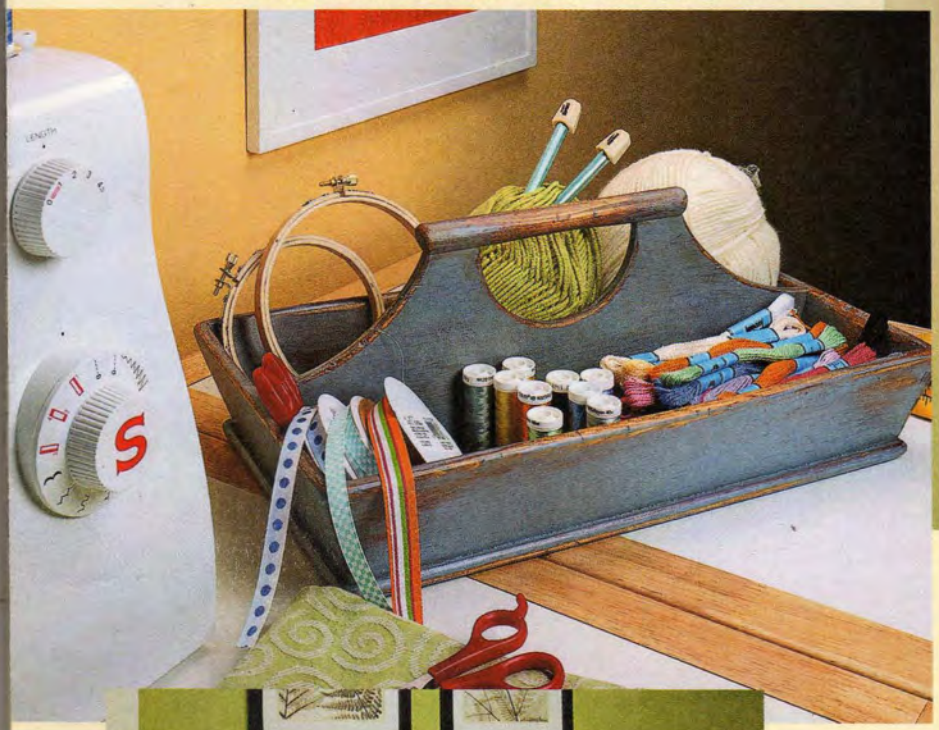

▲ *Craftsman-Style Wall Cabinet.* This attractive cabinet has all the classic Craftsman details. But what you'll really appreciate is the simple, solid construction. It all starts on page 32.

▲ *Storage Bench.* Here's a great reason to spend some time in the shop. This easy-to-build bench offers both seating and valuable storage space. Check it out on page 22.

▲ *Three-Tier In-Box.* This handy project is guaranteed to dress up your desk. The contrasting woods and splined miters are a real attention grabber. You'll find all the details on page 38.